RUSSIAN MARITIME REGISTER OF SHIPPING

Electronic version of printed document approved on 26.06.17

Corr.

RULES

FOR THE CLASSIFICATION AND CONSTRUCTION OF SUBSEA PIPELINES

ND No. 2-020301-005-E

Saint-Petersburg
2017

The Rules for the Classification and Construction of Subsea Pipelines of Russian Maritime Register of Shipping have been approved in accordance with the established approval procedure and come into force on 1 July 2017.

The Rules cover all technical aspects of design and construction of offshore subsea pipelines.

In development of the Rules experience of other classification societies has been taken into consideration.

ISBN 978-5-89331-260-7

© Российский морской регистр судоходства, 2017

CONTENTS

PART I. SUBSEA PIPELINES

1 **General** 5
1.1 Scope of application. 5
1.2 Terms and definitions 5
1.3 Classification 6
1.4 Scope of surveys 7
1.5 Technical documentation. 9
2 **Design loads acting on subsea pipelines** . 12
2.1 General. 12
2.2 Design pressure 12
2.3 Temperature effects 13
2.4 Weight effects. 13
2.5 Current loads 13
2.6 Wave loads and wind loads 14
2.7 Variable hydrodynamic loads 14
2.8 Seismic loads 15
3 **Strength of subsea pipelines** 16
3.1 General. 16
3.2 Determination of the steel pipeline wall thickness 16
3.3 Steel subsea pipeline calculations for buckling (collapse) under hydrostatic pressure 17
3.4 Steel subsea pipeline local buckling analysis 18
3.5 Steel subsea pipeline propagation buckling analysis 18
3.6 Steel subsea pipeline fatigue analysis. . . . 18
3.7 Steel subsea pipeline seismic forces analysis 19
3.8 Strenght calculation for structural components of the pipeline consisting of flexible pipes . 20
4 **Materials**. 23
4.1 General. 23
4.2 Survey and technical supervision. 23
4.3 Procedures of testing pipes and steel rolled products 29
4.4 Steel materials selection 34
4.5 Steel for subsea pipelines 35
4.6 Materials of flexible polymer-metal pipes and their end fittings 40
4.7 Steel flanges 41
4.8 Steel bends and fittings 44
5 **Welding** 50
5.1 General. 50
5.2 Weldability tests 51
5.3 Production requirements for manufacturing processes of subsea pipeline welded structures. 55
5.4 Inspection and defect acceptance limits for welded joints 60
5.5 Application of engineering critical assessment to determine the permissible defects for girth welds 64
6 **Ballasting of subsea pipelines**. 70
6.1 General. 70
6.2 Continuous weight coatings 70
7 **Corrosion protection** 73
7.1 General 73
7.2 Protection against internal corrosion 73
7.3 Protection against external corrosion. 74
7.4 Electrochemical protection 76
7.5 Electrical insulating joints. 80
7.6 Corrosion monitoring systems. 81
8 **Pipeline installation and testing** 82
8.1 General 82
8.2 Pipeline routes and seabed soils 82
8.3 Additional measures for protection of the pipeline in the areas of intense ice gouging. 85
8.4 Marine operations for pipeline laying 87
8.5 Methods of pipeline laying on seabed 88
8.6 Subsea pipeline testing by pressure 90
9 **Maintenance and repair**. 92
9.1 Maintenance 92
9.2 Repair of subsea pipelines 93
10 **Safety assessment** 95
10.1 Scope of application 95
10.2 Terms, definitions and explanations 95
10.3 Basic principles 96
10.4 Basic requirements for risk analysis 97
10.5 Methods of risk analysis 99

PART II. RISERS

1 **General** 100
1.1 Scope of application 100
1.2 Definitions and abbreviations 100
1.3 Classification. 101
1.4 Scope of surveys 101
1.5 Technical documentation 102
2 **Design loads**. 103
3 **Requirements for determining riser dynamic response to environmental conditions and loads** 104
3.1 General 104
3.2 Determining riser elastic static line 104
3.3 Determining dynamic response 104
3.4 Local strength criteria of riser pipes 105
4 **Materials** 106
4.1 General 106
4.2 Metal riser pipes 106
4.3 Riser pipes of composite materials. 106
4.4 Polymer-metal riser pipes 107
5 **Corrosion protection** 108
6 **Riser construction, installation and testing** 109
7 **Riser maintenance and repair** 110
7.1 General 110

7.2 Technical supervision of risers in operation . 110
7.3 Riser repair 111
Appendix 1. Recommendations on provision of reliability and safety of subsea pipelines on seabed soil. 112
Appendix 2. Indices of risk analysis. 116
Appendix 3. Methods of risk analysis. . . . 118
Appendix 4. Special test procedures for steeled pipes and rolled products 125
Appendix 5. Determination of values of wave particle velocities and accelerations in bottom layer 133
Appendix 6. Determination of factors to calculate wave loads 140
Appendix 7. Models of subsea pipeline dynamic response to vortex-induced vibrations . . . 143
Appendix 8. Basic requirements for subsea steel pipeline strength tested under seismic loads. 145
Appendix 9. Strength and stability of riser pipes made of composite materials 149

PART I. SUBSEA PIPELINES

1 GENERAL

1.1 SCOPE OF APPLICATION

See Circular 1216

1.1.1 Requirements of the present Part of the Rules for the Classification and Construction of Subsea Pipelines (hereinafter referred to as "the SP Rules") cover the pipelines designed, constructed and operated offshore, subsea crossings of sections of shore main pipelines to the isolation valve nearest to the shoreline conveying liquid, gaseous and two-phase hydrocarbons as well as other media capable of being transported through the pipelines.

In addition to the SP Rules during performance of the technical supervision Russian Maritime Register of Shipping (hereinafter referred to as "the Register") also applies the Guidelines on Technical Supervision During Construction and Operation of Subsea Pipelines (hereinafter referred to as "the SP Guidelines"), the Guidelines on Technical Supervision of Industrial Safety of Hazardous Production Facilities and their Equipment as well as the standards and rules of the national technical supervisory bodies.

1.1.2 In each particular case the scope of technical supervision carried out by the Register shall be stipulated by a special agreement with the pipeline owner and/or operating organization and, if necessary, agreed upon with the national technical supervisory bodies.

1.1.3 The SP Rules do not cover ship's hoses. The hoses shall comply with the requirements of Section 6, Part VIII "Systems and Piping" of the Rules for the Classification and Construction of Sea-Going Ships. Additional requirements may be imposed on the hoses within the subsea pipelines depending on the application.

1.1.4 The requirements specified by the SP Rules cover the documentation on subsea pipelines, the scope of surveys, strength, materials and welding, on-bottom stability, corrosion protection, laying methods, depth of burial into the seabed soil in the freezing water, testing, operation and safety assessment of subsea pipelines.

1.1.5 The SP Rules are applicable to single pipelines, pipeline bundles and pipelines of "pipe-in-pipe" type.

1.1.6 The SP Rules may be applied to existing pipelines built without the RS technical supervision for the purpose of carrying out survey of technical condition and evaluating the possibility of the RS class assignment.

1.1.7 The Register may allow to use materials, structures, arrangements and products, other than those required by the SP Rules provided that they are as effective as those specified by the SP Rules. In the above cases, data shall be submitted to the Register enabling to ascertain that the materials, structures, arrangements and products in question meet the requirements ensuring the safety of media transportation through the subsea pipelines.

1.1.8 In case referred to in **1.1.6**, the Register may require special tests to be carried out during construction, and may reduce the intervals between periodical surveys or extend the scope of these surveys during operation.

1.1.9 The Register may approve subsea pipelines constructed in compliance with other rules, regulations or standards alternatively or additionally to the SP Rules. In justified cases, the pipelines shall comply with the requirements of the SP Rules within the time period agreed upon with the Register.

1.1.10 Design, construction and operation of subsea pipelines shall meet the requirements of national supervisory bodies.

1.2 TERMS AND DEFINITIONS

See Circular 1216

Atmospheric zone means the part of the pipeline above the splash zone.

Burial depth means the difference between the level of the pipeline top and the natural level of the seabed soil.

Splash zone height means the vertical distance between splash zone upper limit and splash zone lower limit.

Flexible pipes for subsea pipelines mean polymeric-metal pipes with end connecting fittings, which allow large deflections from straightness without a significant increase in bending stresses (generally, the design pressure for flexible pipes shall comprise at least **1**,6 MPa).

Sea depth means the vertical distance measured from the seabed to the average water level plus the total height of astronomical and storm tides.

Over-pressure means the difference between two absolute pressures, namely, outside hydrostatic and internal pressures.

Free span of pipeline means the length of the pipeline part not touching the seabed or supporting facilities.

Permissible stresses mean the total maximum stresses in the pipeline (longitudinal, hoop and tangential) permitted by standards.

Pipeline burial means placing of a subsea pipeline below the natural level of the seabed soil.

Splash zone means the pipeline section periodically flown over by the water due to wave and current effects and water level fluctuations.

Test pressure means the rated pressure applied to the pipeline during testing before its commissioning.

Leak test means a hydraulic pressure testing that ascertains absence of the transported medium leakage.

Strength test means a hydraulic pressure testing that ascertains structural strength of the pipeline.

Ice formation is an integral solid substance made of sea or freshwater ice (e.g. stamukha, ridge, iceberg etc.) floating on the surface of the water.

Ice formation keel is a portion of an ice formation that extends below the water line.

Minimum yield stress means the minimum yield stress specified in the manufacturer's certificate or standard, under which the steel pipes or products are supplied. It is assumed in calculations that the residual elongation will not exceed 0,2 % at the minimum yield stress.

Pipe nominal diameter means an outside pipe diameter specified in the standard, under which the pipes are supplied.

Nominal pipe wall thickness means the pipe wall thickness specified in the standard, under which the pipes are supplied.

Pipeline negative buoyancy means a force directed downwards and equal to the weight of the pipeline structure in the air minus the weight of the water or watered soil displaced by the pipeline submerged into water or watered soil.

Subsea pipeline means the part of the pipeline transporting system, which is located below the water level, including the pipeline itself, corrosion protection system of the pipeline components and other technical devices providing transportation of media under given operational conditions.

Pipeline construction means a set of operations related to manufacture, laying and burial, if any, of a subsea pipeline.

Working pressure means the maximum excess pressure of transported medium, under which the prescribed operation mode of the pipeline is ensured.

Stinger means a device installed on the pipe-laying vessel or barge and intended to provide a non-hazardous curvature of the pipeline and to reduce its bending stresses during laying.

Standpipe means the vertical part of subsea pipeline system secured on the supporting block (supporting foundation) of a fixed offshore platform.

Transported media mean liquid, gaseous and two-phase hydrocarbons and other media capable of being conveyed through pipelines.

Pipe-burying machines mean special subsea devices, including floating facilities with dedicated attached equipment intended for burial of the on-bottom pipelines into the soil or for the preliminary trench excavation.

Pipe-layer (pipe-laying vessel/barge) means the special purpose vessel intended for laying of subsea pipelines.

Subsea pipeline laying means a set of operations, including assembly and welding of pipes, as well as other necessary operations to form a pipeline string, and the process of lowering the string onto the water surface and/or seabed by a safe method.

Pipeline laying by reeling means pipeline laying from a pipe-laying vessel by means of reeling out of a preliminary reeled pipeline string.

Pipeline laying by directional drilling means the combination of directional drilling operations and laying of subsea pipeline.

Pipeline laying by *J*-method means pipeline laying by free immersion on the seabed, using a sloped or vertical frame at sea depths more than 300 m. It consists of two stages: at the first stage the pipeline is lowered from a pipe-laying vessel vertically (or almost vertically) with tie-ins until the pipeline comes in contact with the seabed; at the second stage the pipeline bending occurs and the pipeline is laid on the seabed while the pipe-laying vessel is moving.

Pipeline laying by *S*-method means pipeline laying by free immersion on the seabed, in the course of which the pipeline section between the point of contact with the seabed and the stinger takes form of the S-curve.

Operational reliability level is a set of requirements to parameters of a subsea pipeline and pipe materials meeting the certain safe operation requirements and pipeline classification.

Weight (ballasting) coating means the coating applied on the pipeline to provide its negative buoyancy and protection against the mechanical damages.

Gouging(exaration) is a ploughing of seabed soil by keels of ice formations.

1.3 CLASSIFICATION

1.3.1 The class notation assigned by the Register to the subsea pipeline consists of the character of classification, additional distinguishing marks and descriptive notations defining its purpose and structure.

1.3.2 The character of classification assigned by the Register to the subsea pipeline consists of the following distinguishing marks: SP⊛, SP★ or SP★.

Depending on the supervisory body, under which supervision the subsea pipeline has been constructed, the character of classification is established as follows:

.1 subsea pipelines constructed in accordance with the RS rules and under technical supervision of the Register, are assigned a class notation with the character of classification **SP⊛**;

.2 subsea pipelines constructed in accordance with the rules and under supervision of a classification society or national supervisory body recognized by the Register are assigned a class notation with the character of classification **SP★**;

.3 subsea pipelines constructed without supervision of the classification society or national supervisory body recognized by the Register are assigned a class notation with the character of classification **SP★**.

1.3.3 One of additional distinguishing marks[1] shall be added to the character of classification:

L, **L1**, **L2**, **L3**, **G**, **G1**, **G2** and **G3** assigned to steel subsea pipelines in accordance with Table **1.3.3**;

FP for subsea pipelines made of flexible pipes.

1.3.4 The following descriptive notations shall be added to the character of classification and distinguishing mark:

geographical area;

type of transported medium;

working pressure, in MPa;

maximum temperature of transported medium, in °C;

nominal pipe diameter, mm/number of runs, pcs.

For example, **SP⊛L1**, **Baltic** Sea, **Crude Oil**, **6** MPa, **40** °C, **325/2**.

1.3.5 The Register may assign a class to the subsea pipeline on completion of its construction and assign or renew a class of the pipeline in service.

1.3.6 Assignment of the RS class to the subsea pipeline means confirmation of the pipeline compliance with the applicable requirements of the **SP** Rules, and acceptance of the pipeline under technical supervision for the specified period of time with performance of all surveys required by the Register to confirm the appropriate class.

1.3.7 Confirmation of class means confirmation by the Register of compliance of the pipeline technical condition with the class assigned and extension of the RS technical supervision for the set period of time.

1.3.8 Class of pipeline is generally assigned or renewed by the Register for 5 years, however, in justified cases the Register may assign or renew a class for a lesser period.

1.3.9 In case the subsea pipeline is not submitted to a mandatory survey within the prescribed time period, or it has not been submitted to survey after repair, or structural alterations not agreed with the RS have been made thereon, or the pipeline has been repaired without the RS supervision, the Classification Certificate of Subsea Pipeline ceases its validity, which results in suspension of class (refer to **1.4**.5). Cee Circular 1364c

1.3.10 Withdrawal of class means termination of the RS technical supervision, and reinstatement of class is subject to a special consideration by the Register.

1.3.11 The Register may withdraw the class or refuse to perform technical supervision in cases when the pipeline owner or an operating organization regularly break the **SP** Rules, as well as in cases when the **P**arty, which has made a survey agreement with the Register, violates it.

1.3.12 Materials and products used shall be subject to necessary surveys and tests during manufacture in the order and to the extent specified by the Register.

1.4 SCOPE OF SURVEYS

1.4.1 General.

1.4.1.1 The scope of surveys and classification covers the following stages of activities:

review and approval of technical documentation;

survey of materials and products intended for construction and repair of pipelines;

supervision during construction and repair of subsea pipelines;

surveys of subsea pipelines in service;

assignment, confirmation, renewal and reinstatement of the class, making appropriate entries and issue of the RS documents.

Table 1.3.3 See Circular 1216

Additional distinguishing marks to be added to the character of classification of steel subsea pipelines

Operational reliability level	Type of transported medium	
	Liquids and two-phase flows	Gas
Basic reliability level	**L**	**G**
Higher operational reliability level	**L1**	**G1**
Corrosive media transportation	**L2**	**G2**
Seismically active regions and ice-resistant standpipes	**L3**	**G3**
Note. Where a package of requirements is applied to a pipeline, an additional distinguishing mark shall be introduced by means of two appropriate indices (**G2/3**, for instance, for a pipeline designed for corrosive media transportation in a seismically active region).		

[1]Hereinafter as a differential requirement for the strength and materials of pipelines having additional distinguishing marks to the character of classification, one or another additional mark shall be understood as a class notation of the pipeline for short (for example, refer to Table 3.2.5, 3.2.6, etc.).

1.4.1.2 Any alterations made on the part of builders and owners in respect of the pipeline materials and structures, to which the requirements of the SP Rules apply, shall be approved by the Register before they are put into service.

1.4.1.3 Controversial issues arising during surveys may be transferred by the pipeline owners directly to the Register Head Office (RHO).

1.4.2 Survey of materials and products.

1.4.2.1 Materials and products shall be manufactured in accordance with the technical documentation approved by the Register.

During surveys the Register may check compliance with structural, technological, manufacturing standards and processes, which are not regulated by the Rules, but which influence the fulfillment of the requirements of the SP Rules.

1.4.2.2 Materials, products and manufacturing processes that are new or submitted to survey for the first time shall be approved by the Register. Specimens of materials and products or new manufacturing processes shall be tested according to the program and in the scope agreed with the Register subsequent to their technical documentation being approved by the Register.

1.4.2.3 The Register may perform supervision during manufacture of materials and products in the following forms:

survey by a surveyor;

survey of a firm by the Register;

survey in the form of review of the technical documentation by the Register;

survey on behalf of the Register.

The form of survey is selected by the Register when an agreement on technical supervision is made by the Register.

1.4.2.4 During survey materials and products shall be subjected to necessary tests according to the procedures and within the scope prescribed by the Register. The materials and products shall be provided with the documents specified by the Register and, where necessary, the brands confirming the fact of their survey, and marking enabling to determine their compliance with the above documents.

1.4.3 Technical supervision during construction, operation and repair of subsea pipelines.

1.4.3.1 Technical supervision during construction of subsea pipelines is performed by surveyors to the Register in compliance with the technical documentation approved by the Register. The scope of inspections, measurements and tests to be conducted during technical supervision is established by the Register with respect to the specific conditions for the pipeline.

1.4.3.2 During operation of the subsea pipeline their owners shall keep the terms of periodical and other surveys prescribed by the Register and properly prepare the pipeline for the surveys.

1.4.3.3 Pipeline owners shall notify the Register of emergencies and repairs of the pipeline and pipeline components covered by the requirements of the SP Rules that have taken place between the surveys.

1.4.3.4 Where the new components covered by the requirements of the SP Rules have been installed on the pipeline during its operation or repair, the provisions of **1.4.2**, **1.4.3.1** to **1.4.3.3** shall be applied.

1.4.4 Types and frequency of surveys.

1.4.4.1 Subsea pipelines are subject to the following surveys:

initial, periodical (special, annual and intermediate) and occasional.

Initial surveys are divided into surveys carried out during construction of subsea pipelines under the RS technical supervision and surveys of subsea pipeline constructed under supervision of classification society recognized by the Register or national supervisory body.

Special survey for class renewal shall be generally carried out at 5-year intervals of the subsea pipeline operation in case of satisfactory results of annual surveys and one intermediate survey.

Annual surveys for confirmation of class shall be carried out every calendar year with a deviation from the prescribed date of the special survey within **3** months before and after this date.

Intermediate survey shall be carried out in the extended scope to confirm the class validity between special surveys.

Occasional survey shall be carried out after accidents, repairs and in other necessary cases.

1.4.4.2 Initial survey is performed with the aim to assign an appropriate class to the subsea pipeline that is initially submitted to the Register for classification. The subsea pipelines that were earlier classed by the Register, but which class was withdrawn by whatever reason, are also subject to initial survey. Initial survey includes thorough examination, inspections, tests and measurements, the scope of which is specified by the Register in each case depending on the environmental conditions of the pipeline operation, age of the pipeline, measures of its protection, technical condition of the pipeline, coatings, valves, etc.

1.4.4.3 Subject to initial survey are the subsea pipelines constructed not in accordance with the RS rules, without technical supervision of Classification society recognized by the Register or national supervisory body. In such case, initial survey which scope is determined by the Register means close-up and normal survey, which shall be performed, where necessary, together with testing of the pipelines and components with the aim to confirm their compliance with the requirements of the SP Rules. Where documents issued for the subsea pipeline by classification society or national supervisory body recognized by the Register are available, initial survey is performed within the scope of

special survey. In case the required technical documentation is not available to the full extent, the survey program may be extended for the components, the documentation on which is missing.

1.4.4.4 Surveys performed during construction of subsea pipelines shall be aimed at verifying compliance of the materials, components and manufacturing processes with the requirements of the technical design and detailed design documentation on the subsea pipeline. The scope of survey is subject to special consideration by the Register in each particular case.

The date of the pipeline survey upon completion of construction is the date of actual completion of the survey and issue of the Classification Certificate of Subsea Pipeline (SP) (refer to **1.4.5**).

1.4.4.5 Special survey for class renewal is aimed to ascertain that the subsea pipeline is in a satisfactory technical condition and meets the requirements of the SP Rules. It is performed together with testing of the pipeline, valves, automated control system, alarm, protection and indication systems. Special surveys, which scope is determined by the Register, shall be carried out within the intervals established by the Register, as a rule, once every five years.

1.4.4.6 Mandatory annual survey means survey of the subsea pipeline, including valves, automated control system, alarm, protection and indication system, other components, in the scope adequate to confirm that the pipeline and its components keep complying with the requirements of the SP Rules, its class being thus confirmed.

The scope of annual surveys shall be established by the Register.

1.4.4.7 During special surveys of pipelines their testing under pressure shall be combined with testing in operation of their pump and compressor stations, shut-off and safety valves, remote by operated drives.

1.4.4.8 Intermediate survey of the subsea pipeline shall be carried out between special surveys instead of the second or third survey by agreement with the Register. The scope of survey shall be established by the Register.

1.4.4.9 Occasional surveys of the subsea pipelines or their individual components are performed upon submission for survey in all cases other than initial and periodical surveys. Occasional survey is carried out to assess permissible detected defects or damages after an accident, including those that result in pipeline leaks, spillage of fluids and emissions of gaseous transported media.

The scope and procedure of the surveys are defined by the Register on the basis of the survey purpose, age and technical condition of the subsea pipeline.

1.4.4.10 Occasional survey after an accident shall be aimed at identifying the type and nature of the damage, scope of work to be done for elimination of the accident consequences and at determining a possibility and conditions of retainment of class after elimination of the consequences.

1.4.5 Documents issued by the Register upon completion of the survey.

1.4.5.1 The RS documents are issued upon confirmation of the satisfactory assessment of the technical condition of the item of supervision made during surveys and tests.

1.4.5.2 The document to confirm the compliance with the SP Rules is the Classification Certificate of Subsea Pipeline (form 9.9.**2**).

1.4.5.3 Reports on survey of subsea pipeline (SP) after construction (form 9.9.**1**), reports on annual/intermediate/special survey of subsea pipeline (SP) (form 9.9.**3**) and other documents, if necessary, shall be issued by the Register during the supervision of subsea pipelines.

1.4.5.4 The Register may recognize fully or partially the documents of other classification societies, supervisory bodies and other organizations.

1.4.5.5 The Classification Certificate of Subsea Pipeline becomes invalid in the following cases: See Circular 1216

if the subsea pipeline and its components are not submitted for periodical survey in terms with regard to the delays provided for periodical surveys in the SP Rules; Cee Circular 1364c

after repair conducted without the RS supervision or replacement of the components covered by the SP Rules;

in case the subsea pipeline is not in fit technical condition providing its safety;

when the pipeline is used for the purpose and under operational conditions different from those indicated in the class notation.

1.5 TECHNICAL DOCUMENTATION

1.5.1 Prior to commencement of the subsea pipeline construction, technical documentation, which allows ascertaining that the requirements of the RS rules for this subsea pipeline are met, shall be submitted to the Register for review.

The scope of the technical documentation is specified in **1.5.2** to **1.5.11**. The additional instructions on the documentation composition given in the follow-up sections of the SP Rules shall be also taken into account.

1.5.2 General:

.1 specification;

.2 drawings (diagrams) of pipeline routing (rout location) with all data required for the design review;

.3 list of components and equipment with indication of the main technical characteristics, manufacturer and approval by the Register or another competent body.

1.5.3 Documentation on pipes.

1.5.3.1 The technical documentation to be submitted shall contain the data on dimensions, materials,

technique and procedure for steel pipe welding. The following shall be presented:

.1 certificates for pipes and test reports thereof (specification for the pipe delivery or technical requirements for the pipe purchasing);

.2 drawings of pipe edge preparation for welding;

.3 drawings of pipeline sections;

.4 drawings of pipe strings (where pipes are laid in strings);

.5 procedure for pipe welding;

.6 types and scope of tests;

.7 methods and scope of non-destructive testing;

.8 information on the medium to be transported;

.9 hydraulic calculation;

.10 drawings of bends, T-joints and reducers;

.11 drawings of spool pieces;

.12 calculations of permissible free-spanning pipelines at the stages of construction, testing and operation.

1.5.3.2 The following procedures and calculations shall be submitted together with the drawings:

.1 description of the laying method of the subsea pipeline on the seabed;

.2 necessary information for determination of external loads (forces and moments) due to wind, currents, waves, ice and other parameters including accidental loads (caused by trawl nets, anchors, etc.) to be taken into account in the pipeline strength analysis;

.3 calculation of the pipe wall nominal thickness for appropriate load combinations;

.4 results of the required model tests, which may be used for confirmation or more accurate definition of substantiation and calculations;

.5 pipeline strength analyses during laying with assigned safe parameters for waves, currents and wind.

.6 calculattions to confirm the seismic resistance of subsea pipeline;

.7 calculations of the subsea pipeline burial depth for the ice exaration areas;

.8 calculations of strength of spool pieces and flanged joints.

1.5.3.3 The flexible pipe documentation shall include the following particulars and calculations:

.1 certificates for pipes and test reports thereof (specification for the pipe delivery or technical requirements for the pipe purchasing);

.2 design of pipes and connecting elements (end fittings);

.3 properties of the metal and polymer materials used;

.4 methods of calculation of the parameters of all pipe layers including determination of design internal and external pressure, tensile and torsional strength;

.5 scope application of flexible pipes, including the parameters of transported medium;

.6 allowable types of exposure (static, dynamic, requirements for cycle and time resources) and permissible parameters of the environment;

.7 minimum bending radius during storage, laying and operation;

.8 strength calculations during laying, operation and tests including calculations of fatigue resistance;

.9 particulars on inspection and monitoring, including the design forecast of the pipe service life.

1.5.4 Documentation on weights used for the pipeline ballasting:

.1 calculation of subsea pipeline buoyancy (buoyant force);

.2 arrangement plan of ballast weight;

.3 design drawings of the ballast weight and/or weight coating construction;

.4 ballasting calculations for the subsea pipeline when using concrete coated pipes.

1.5.5 Documentation on valves and their drives:

.1 arrangement plan for shut-off and safety valves;

.2 certificates and test reports on valves that confirm their suitability for the media to be transported and anticipated operational conditions;

.3 diagram of the pipeline valves remote control;

.4 design drawings of drives.

1.5.6 Documentation on shore crossings:

.1 description of the subsea pipeline on shore landfall;

.2 design drawings of shore crossing.

1.5.7 Documentation on laying the pipeline on the seabed:

.1 laying methods and process flow diagrams with indication of basic parameters;

.2 drawing of the trench or laying zone;

.3 description of trench backfilling;

.4 design of crossings with the preliminary laid pipelines and cables;

.5 calculations of pipeline strength during seabed burial;

.6 strength calculations of prelaid pipeline strings being lifted and connected afloat (tie-in);

.7 procedures and calculations for keeping pipeline strings afloat, including string securing when wave height, current and wind velocity, water depth exceed the safe values.

1.5.8 Documentation on the automated control and alarm systems:

.1 diagram of the alarm system that keeps under control transported medium characteristics, leakages, pump and compressor parameters; shut-off valve position;

.2 list of monitored parameters with the types of sensors and devices, and their characteristics specified;

.3 certificates for instrumentation, sound and light sources for instruments and other components of the alarm system.

1.5.9 Documentation on corrosion protection and isolation:

.1 certificates for corrosion-protection coatings;

.2 substantiation for selection of the pipeline corrosion-resistant coating;

.3 scheme of the pipeline corrosion-protection coating and isolation;

.4 instruction on preparation of the pipeline surface and application of corrosion-protection coatings and isolation;

.5 cathodic protection scheme (anodes arrangement);

.6 determination of anodes weight;

.7 documentation for electrical insulating joints and/or flanges.

1.5.10 Documentation on risk analysis shall be prepared in compliance with Section **10**. It is allowed to perform risk analysis for the subsea pipeline through the stages of the offshore field development project design.

1.5.11 Where new components that are significantly different from the original ones and meet the requirements of the SP Rules are mounted on the subsea pipeline in operation, it is necessary to submit to the Register for review and approval the additional technical documentation on new products in the scope required for the subsea pipeline under construction.

1.5.12 In cases referred to in **1.3**.5, the amount of technical documentation to be submitted to the Register is subject to special consideration by the Register in each particular case.

1.5.13 The standards for individual materials and products agreed upon with the Register may substitute an appropriate part of the technical documentation.

1.5.14 Prior to their implementation, amendments made in the technical documentation approved by the Register and dealt with the components and structures covered by the requirements of the SP Rules shall be submitted to the Register for approval.

1.5.15 The technical documentation submitted to the Register for review and approval shall be prepared in such a way or supplied with such additional information that it enables to make sure that the requirements of the SP Rules are met.

1.5.16 The calculations necessary for determination of the parameters and values regulated by the SP Rules shall be made in compliance with the provisions of the SP Rules or according to the procedures agreed upon with the Register. The procedures and methods used for calculations shall provide an adequate accuracy of the problem solution. Computer-aided calculations shall be made in accordance with the programs having a Type Approval Certificate for Computer Program (form **6.8**.5). The Register may require performance of check calculations with the aid of any programme. The Register does not check the correctness of computing operations in calculations. The basic regulations regarding approval of the computeraided calculation programmes and the calculation procedures are specified in **12.2**, Part II "Technical Documentation" of the Rules for Technical Supervision during Construction of Ships and Manufacture of Materials and Products for Ships.

See Circular 1216

1.5.17 Standards and normative documents on materials and products shall be agreed upon for the period of their validity. When revising the standards and normative documents, they shall be verified to take into account the requirements of the current rules and regulations of the Register.

1.5.18 The RS approval of the technical documentation is valid for a period of six years. Upon expiry of this term or in case where the interval between the date of approval and commencement of the pipeline construction exceeds three years, the documentation shall be verified and updated to take account of the amendments to the RS rules.

1.5.19 Approval of technical documentation is acknowledged by putting on it the appropriate stamps of the Register. The approval of the documentation by the Register does not relate to the elements and structures contained therein, to which the requirements of the SP Rules are not applicable.

2 DESIGN LOADS ACTING ON SUBSEA PIPELINES

2.1 GENERAL

2.1.1 Design loads acting on the subsea pipeline shall take into consideration operating conditions, test loads and loads during pipeline installation. Each type of loads defined in **2.2** to **2.8** shall be multiplied by significance factor γ. The values of factors are specified in Table **2.1.1**.

2.1.2 Considering the physical phenomena lying at the base of design loads, the latter may be subdivided as follows:

functional loads;

external (natural) loads;

pipeline installation, laying and test loads;

accidental and special (emergency) loads.

2.1.3 Loads due to target purpose of subsea pipeline system and its operation in accordance with the purpose shall be regarded as functional loads (internal pressure, thermal effects of transported medium, seabed soil response, etc.). All the functional loads affecting the system operability at the construction and operation stage shall be considered.

2.1.4 The external (natural) loads upon a subsea pipeline system are due to environmental factors and cannot be attributed to functional or special (emergency) loads.

2.1.5 Under normative ambient conditions (wind, waves, currents, water and air temperature) and given standard assembly technique, pipeline assembly loads shall be determined on the basis of installation procedure, external (natural) conditions and pipeline location characteristics.

2.1.6 Occasional loads (due to fallen items, fishing gear, etc.) and special (extraordinary) loads as well as their emergence probability shall be subject to special consideration by the Register.

2.2 DESIGN PRESSURE

2.2.1 Design pressure in the pipeline p_0, in MPa, is determined by the formula

$$p_0 = (p_i - p_{g\,\min}) + \Delta p, \qquad (2.2.1)$$

where p_i = internal working pressure in the pipeline assumed in design, in MPa;

$p_{g\,\min}$ = minimal external hydrostatic pressure on the pipeline, in MPa;

Δp = additional design pressure taking account of touch-up pressure of the transported medium in the pipeline and/or pressure of a hydraulic impact in the pipeline, in MPa. Additional design pressure is determined on the basis of the pipeline hydraulic calculation approved by the Register.

2.2.2 The value of $p_{g\min}$ is determined by the formula

$$p_{g\,\min} = \rho_w g(d_{\min} - h_w/2)10^{-6} \qquad (2.2.2)$$

where ρ_w = density of sea water (kg/m^3);

g = acceleration due to gravity (m/s2);

$d_{\min}$ = the lowest still water level along the pipeline route, in m, taking into account tides and storm surge effects with 10^{-2} 1/year probability;

h_w = design wave height on the pipeline design section, in m, with 10^{-2} 1/year probability.

2.2.3 The value of the additional design pressure Δp, in MPa, taking account of the hydraulic impact shall be not less than the value determined by the formula

$$\Delta p = V_{int}\sqrt{\frac{\rho_{int}Et_cK}{Et_c + D_{int}K}}\,10^{-3}, \qquad (2.2.3)$$

where V_{int} = velocity of the medium to be transported in the pipeline, in m/s;

E = Young's modulus of the pipe material, in MPa;

K = bulk modulus of the transported medium, in MPa;

ρ_{int} = density of the transported medium, in kg/m3;

D_{int} = internal diameter of the pipe, in mm;

t_c = wall thickness of the pipe, in mm.

Table 2.1.1

Significance factors of load components γ

Type of load	γ
Weight of pipeline and auxiliary structures	1,1
Internal pressure:	
for gas pipelines	1,1
for oil- and petroleum product pipelines	1,15
External water pressure with regard to water level changes due to tides and waves	1,1
Pipeline crowning/burial soil pressure in trench	1,4
Pipeline icing in case the media with temperature below zero are transported	1,4
Seismic	1,1
Current	1,1
Wave	1,15
Wind	1,1
Temperature	1,0

2.2.4 Where special structural measures are taken to reduce the hydraulic impact pressure (limitation of shut-off speed for valves, application of special devices for protection of the pipeline against transient processes, etc.) the value of Δp may be reduced in calculations by the value agreed with the Register.

2.3 TEMPERATURE EFFECTS

2.3.1 For a steel subsea pipeline, axial forces arising as a result of pipe wall temperature variation shall be determined. The temperature variation in pipe wall metal shall be accepted equal to the difference between the maximum and minimum possible wall temperature during operation and laying.

2.3.2 The maximum and minimum temperature of pipe walls during operation shall be determined on the basis of ambient temperature, initial temperature of transferred medium and pipeline/environment thermal interface intensity.

The minimum ambient temperature shall be determined for a pipeline with 10^{-2} 1/year probability based on the engineering survey.

2.3.3 Allowance shall be made for pipeline shifting due to axial thermal expansion in areas adjacent to stationary platforms/subsea structures (subsea manifold, for instance) and where the pipeline changes its direction (for instance,spool pieces with bends).

2.4 WEIGHT EFFECTS

2.4.1 The total linear load due to weight forces shall account for the weight of pipes, protective coatings, concrete coatings and ballast, various pipeline components (anodes, fittings, T-joints, etc.), transported medium, buoyancy forces. Besides, where a pipeline shall be buried in a trench and/or crowned, the burial/crowning soil pressure shall be considered.

2.4.2 Where a gas-/air-filled pipeline having positive buoyancy shall be buried in a trench, the shear strength of the burial soil shall be sufficient to prevent the pipeline floating-up.

2.4.3 In case a pipeline is laid on the ground and the transported medium temperature may fall below zero, possible pipeline icing shall be considered when determining the buoyancy forces.

2.5 CURRENT LOADS

2.5.1 Linear loads: horizontal $F_{c,h}$, vertical $F_{c,v}$ and total F_c due to current, in N/m, are determined by the formulae:

$$F_{c,h} = c_x \frac{\rho_w V_c^2}{2} D_a; \qquad (2.5.1\text{-}1)$$

$$F_{c,v} = c_z \frac{\rho_w V_c^2}{2} D_a; \qquad (2.5.1\text{-}2)$$

$$F_c = \sqrt{F_{c,h}^2 + F_{c,v}^2} \qquad (2.5.1\text{-}3)$$

where V_c = design current velocity projected on the normal to the pipeline axis at the depth of pipeline installation, in m/s, and determined for the given geographical region with 10^{-2} 1/year probability dased on the engineering survey;
ρ_w = sea water density, in kg/m^3;
c_x = pipeline resistance factor determined in accordance with 2.5.2;
c_z = pipeline resistance factor in accordance with 2.5.3;
D_a = pipeline outside diameter, in m.

2.5.2 The resistance factor c_x, of a pipeline lying on the seabed shall be determined from the diagram in Fig. 2.5.2 proceeding from the Reynolds number *Re* and the relative roughness of external pipe surfaces *k* (corrosion protection or weight coating) which shall be determined by the formulae:

$$Re = V_c D_a / \nu; \qquad (2.5.2\text{-}1)$$

$$k = k_0 / D_a, \qquad (2.5.2\text{-}2)$$

where $\nu = 1{,}2 \cdot 10^{-6}$ m^2/s — the kinematical viscosity of water;
k_0 = the relative value of roughness projections on pipe external surface, in m.

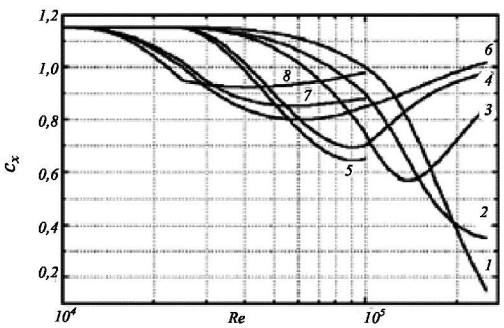

Fig. 2.5.2
Dependence of c_x factor from the Reynolds number and relative roughness of the pipeline surface:
1 — $k = 0$; *2* — $k = 5{,}0 \cdot 10^{-4}$; *3* — $k = 2{,}0 \cdot 10^{-3}$; *4* — $k = 4{,}0 \cdot 10^{-3}$; *5* — $k = 5{,}0 \cdot 10^{-3}$; *6* — $k = 7{,}0 \cdot 10^{-3}$; *7* — $k = 9{,}0 \cdot 10^{-3}$; *8* — $k = 2{,}0 \cdot 10^{-2}$

2.5.3 The resistance factor c_z of a pipeline lying on the seabed shall be adopted equal to 0,8. Where the distance between the pipeline and seabed is equal to *d*, the factors c_x and c_z shall be determined from the diagram in Fig. 2.5.3.

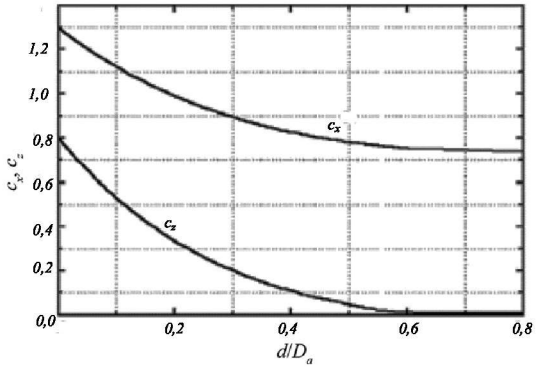

Fig. 2.5.3
Factors c_x and c_z depending on the relative distance of the pipeline from the seabed d/D_a

2.6 WAVE LOADS AND WIND LOADS

2.6.1 Horizontal linear wave load on the pipeline is calculated as superposition of resistance forces $F_{w,s}$, and inertia forces $F_{w,i}$, in N/m, according to the formulae:

$$F_{w,s} = c_d \frac{\rho_w V_w^2}{2} D_a; \qquad (2.6.1\text{-}1)$$

$$F_{w,i} = c_i \frac{\pi \rho_w a_w}{4} D_a^2 \qquad (2.6.1\text{-}2)$$

where ρ_w, D_a = refer to Formulae (2.5.1-1) and (2.5.1-2).
for V_w, a_w = refer to 2.6.2;
for c_d, c_i = resistance factors of undulatory motion of water particles, refer to 2.6.5.

2.6.2 The design wave particle velocity V_w, in m/s, and acceleration a_w, in m/s^2, projected onto the normal to the pipeline axis at the depth of pipeline installation shall be determined for the given geographical region with an exceedance probability of 10^{-2} 1/year for the most wave hazardous direction according to the results of a direct engineering survey lengthwise of the subsea pipeline route.

Appendix 5 provides the recommended data on the above components of the wave particle velocity and acceleration depending on the sea depth, height and period of waves with an exceedance probability of 10^{-2} 1/year, which shall be determined according to the results of the engineering survey. The Register reference data on wind and wave conditions may be used for specifying the wave height and period in those regions of sea water areas wherein these values were determined.

2.6.3 The total horizontal wave load $F_{w,h}$, in N/m, is determined by the formula

$$F_{w,h} = \sqrt{F_{w,s}^2 + F_{w,i}^2}. \qquad (2.6.3)$$

2.6.4 Vertical linear wave load $F_{w,v}$, in N/m, is determined by the formula

$$F_{w,v} = c_v \frac{\rho_w V_w^2}{2} D_a \qquad (2.6.4)$$

where c_v = refer to 2.6.5.

2.6.5 The factors c_d, c_i and c_v shall be determined on the basis of wave characteristics, subsea pipeline parameters and location, as stipulated in Appendix 6 which also considers the combined wave and current loads.

2.6.6 Linear wave loads F_{sl}, in N/m, due to wave impacts on the pipeline surface, in the splash zone are determined by the formula

$$F_{sl} = 1{,}6 \rho_w V_{sl}^2 D_a \qquad (2.6.6)$$

where V_{sl} = design surface wave particle velocity projected on the normal to the pipeline axis, in m/s, and determined for the given geographical region with 10^{-2} 1/year probability for the most wave hazardous direction based on the engineering survey.

2.6.7 Linear wind loads $F_{w,d}$, in N/m, for the pipeline sections at a distance z, in m, above the still water level are determined by the formula

$$F_{w,d} = 0{,}23 \rho_a V_{w,d}^2 z^{0,2} D_a, \qquad (2.6.7)$$

where ρ_a = air density, in kg/m^3;
$V_{w,d}$ = design wind velocity, determined for the given geographical region whith 10^{-2} 1/year probability, in m/s.

2.7 VARIABLE HYDRODYNAMIC LOADS

2.7.1 For subsea pipelines laid on the seabed and not buried therein as well as for those laid in open trenches and having free spans in their location, variable (cyclic) dynamic loads due to vortex induced vibrations, i.e. vortex shedding by the pipe surface when washed by the water flow, shall be determined.

2.7.2 For subsea pipelines, the phenomenon of the above variable hydrodynamic load emergence shall be contemplated with Reynolds numbers $Re \geqslant 300$, as determined by Formula (2.5.2-1).

2.7.3 To exclude resonance phenomena, in-line motion and cross-flow variable hydrodynamic loads, frequencies of these loads application and eigen-vibration frequencies of the pipeline shall be determined for subsea pipelines specified in 2.7.2.

2.7.4 When determining variable hydrodynamic loads, stationary components of hydrodynamic flow (current) and periodically changing wave-induced velocities and accelerations of water flow in the near-bottom area shall be considered.

2.7.5 To determine the dynamic response of subsea pipelines under conditions of vortex induced vibrations,

the following hydrodynamic parameters shall be calculated:

.1 reduced velocity

$$V_R = (V_c + V_w)/f_0 D_a, \qquad (2.7.5.1)$$

where f_0 = natural frequency for a given vibration mode, in s^{-1};
V_c = to be determined by Formulae (2.5.1-1) and (2.5.1-2);
for V_w = refer to 2.6.2.

.2 for Keulegan-Carpenter number — refer to Formula (1), Appendix **6**;

.3 current flow velocity ratio

$$\alpha = V_c/(V_c + V_w); \qquad (2.7.5.3)$$

.4 turbulence intensity

$$I_c = \sigma_c/V_c \qquad (2.7.5.4)$$

where σ_c = standard deviation of perturbation of the velocity fluctuations, in m/s.

.5 relative angle between flow and pipeline direction, θ_{rel}, in rad.;

.6 stability parameter

$$K_S = \frac{4\pi m_e \zeta_T}{\rho_w D_a^2} \qquad (2.7.5.6)$$

where ζ_T = total modal damping ratio;
m_e = effective mass, in kg/m.

2.7.6 The total modal damping ratio ζ_T comprises:

.1 structural damping ratio, ζ_{str}, is due to internal friction forces of the material. If no information is available, structural modal damping ratio of ζ_{str} = 0,005 can be assumed, if a concrete weight coating of ζ_{str} = 0,01 — 0,02 is present;

.2 soil modal damping ratio, ζ_{soil}, may be adopted as ζ_{soil} = 0,01 in a first approximation;

.3 hydrodynamic modal damping ratio ζ_h (within the lock-in region, ζ_h = 0).

2.7.7 The effective mass, m_e, in kg/m, shall be determined by the formula

$$m_e = \int_L m(s)\phi^2(s)ds / \int_L \phi^2(s)ds \qquad (2.7.7)$$

where $\phi(s)$ = the assumed pipeline vibration mode satisfying the boundary conditions;
$m(s)$ = the mass per unit of pipeline length including structural mass, added mass and transported medium mass, in kg/m;
L = free span length, in m.

2.8 SEISMIC LOADS

2.8.1 The strength of steel subsea pipelines shall be checked under seismic loads. Seismic resistance of subsea pipelines to factors mentioned below shall be assessed by calculation in compliance with **3**.7, Part I "Subsea Pipelines" of the SP Rules:

Strength Level Earthquake (SLE) once in 100-years repeatability;

Ductility Level Earthquake (DLE) once in 500 years.

2.8.2 The basic requirements for design external factors for the seismic resistance assessment of subsea pipelines are specified in Appendix **8**.

3 STRENGTH OF SUBSEA PIPELINES

3.1 GENERAL

3.1.1 The strength analysis of subsea pipelines shall be based on classical or semi-empirical procedures and numerical methods that take into consideration the combination of actual external loads, boundary conditions and resistance parameters of pipes deviating from regular round shape.

3.2 DETERMINATION OF THE STEEL PIPELINE WALL THICKNESS

3.2.1 Selection of the steel subsea pipeline wall thickness, which is one of the most important design stages, shall be based on the necessity to ensure the pipeline strength (stability) and required safety level. The calculations shall be made for the most unfavorable combination of possible loads.

3.2.2 The wall thickness of the steel pipeline shall be determined based on the following conditions:

local strength of the pipeline characterized by the maximum values of hoop stresses;

adequate local buckling of the pipeline.

3.2.3 The wall thickness t_c of the steel pipeline, in mm, based on local strength calculations, is determined by the formula

$$t_c = \frac{p_0 D_a}{2\sigma\varphi} + c_1 + c_2 \qquad (3.2.3)$$

where p_0 = design pressure in the pipeline, in MPa, determined in accordance with 2.2;
D_a = outside diameter of the pipe, in mm;
σ = permissible stress of the pipe material (refer to 3.2.5), in MPa;
φ = strength factor determined depending on the pipe manufacturing method (refer to 3.2.4);
c_1 = corrosion allowance (refer to 7.2.1), in mm;
c_2 = manufacturing tolerance, in mm.

3.2.4 For seamless pipes, the strength factor φ shall be equal to **1**,0 for seamless pipes and welded pipes approved by the Register and manufactured at the firms recognized by the Register.

For other welded expanded pipes (longitudinally welded with one or two welds and spiral welded pipes), the strength factor φ shall be adopted proceeding from the wall thickness:

0,9 where the wall thickness does not exceed **20** mm;

0,85 for bigger wall thickness.

Application of welded non-expanded pipes shall not be recommended. If they are used, the strength factor φ shall be equal to 0,85.

The values of strength factor φ may be increased as compared to those mentioned above if this opportunity is proved by a full-scale burst test of the pipes in accordance with the RS-approved program.

3.2.5 Permissible stress σ shall be taken equal to the least of the following values:

$$\sigma = \min\left(\frac{R_e}{n_e}, \frac{R_m}{n_m}\right) \qquad (3.2.5)$$

where R_e = minimum yield stress of the pipe metal, in MPa;
R_m = minimum tensile strength of the pipe metal, in MPa;
n_e = strength factor in terms of yield stress;
n_m = strength factor in terms of tensile strength.

The values of n_e и n_m based on the pipeline class are given in Table **3.2.5**.

3.2.6 Total maximum stresses in the pipeline σ_{max}, in MPa, caused by the internal and external pressures, longitudinal forces (e.g due to thermal expansion and/or elastic bending of the pipeline sections), as well as the external loads referred to in Section **2** with regard to the pipeline out-of-roundness shall not exceed the permissible stresses:

$$\sigma_{max} = \sqrt{\sigma_x^2 + \sigma_{hp}^2 - \sigma_x \sigma_{hp} + 3\tau^2} \leqslant k_\sigma R_e \qquad (3.2.6)$$

where σ_x = total longitudinal stresses, in MPa;

Table 3.2.5

Strength factors n_e and n_m

Pipeline class	Subsea section		Shore and offshore sections in protected area	
	n_e	n_m	n_e	n_m
L, LI	1,18	1,75	1,23	1,78
L2	1,22	1,88	1,28	1,92
L3	1,25	2,0	1,33	2,05
G, G1	1,18	1,75	1,23	1,78
G2	1,20	1,78	1,27	1,81
G3	1,22	1,81	1,33	1,92

Notes: 1. The protected area of the onshore pipeline sections is the main pipeline sections from the isolation valve nearest to the shoreline and further along the seabed at a distance not less than 500 m.

2. Upon agreement with the Register strength factors may be reduced in making special overall and local strength calculations, having regard to the particular local conditions in the area of pipeline laying and pipeline position on the seabed.

σ_{hp} = total hoop stresses, in MPa;
τ = tangential (shear) stresses, in MPa;
k_σ = strength factor in terms of total stresses.

Strength factors k_σ based on the pipeline class are specified in Table 3.2.6.

3.3 STEEL SUBSEA PIPELINE CALCULATIONS FOR BUCKLING (COLLAPSE) UNDER HYDROSTATIC PRESSURE

3.3.1 Along with the calculations for the internal pressure effect, the subsea pipeline shall be mandatory subjected to strength analysis in terms of external hydrostatic pressurepe p_e (refer to 3.3.3) capable to cause buckling of the pipeline wall at certain depths or cause hoop compressive stresses in excess of the permissible values (refer to 3.2.6).

3.3.2 Strength analysis of subsea pipelines for pure buckling shall be made for the most unfavorable conditions, i.e. for the minimum possible internal pressure and the maximum hydrostatic pressure:

generally the minimum internal pressure takes place during construction and drying of the pipeline internal surface after hydraulic tests (in such cases, it will be equal to the atmospheric pressure or even less where vacuum is used for drying);

the maximum water depth corresponds to the maximum hydrostatic pressure, taking into account the tides and storm surges, seasonal and many-year fluctuations of the sea level.

3.3.3 The value of the critical external pressure on the pipeline p_e, in MPa, that causes buckling of the cross-section but does not initiate plastic deformations in the pipe wall (so called elastic buckling) may be determined by formula

$$p_e = \frac{2E}{1-\mu^2}\left(\frac{t_c}{D_a}\right)^3 \qquad (3.3.3)$$

where E = Young's modulus of the pipe material, in MPa;
μ = Poisson's ratio;
D_a = outside diameter of the pipe, in mm;
t_c = wall thickness of the pipe, in m.

3.3.4 Depending on elastic and plastic properties of the pipe material and with certain ratio between the pipe diameter and wall thickness, the level of hoop compressive stresses may reach the yield stress with an increase of the external load even before buckling occurs. The value of buckling pressure p_y, in MPa, is determined by the following formula:

$$p_y = \frac{2R_e t_c}{D_{int}} \qquad (3.3.4)$$

where D_{int} = internal diameter of the pipe, in mm;
R_e = refer to Formula (3.2.5);
t_c = wall thickness of the pipe, in mm

3.3.5 Bearing capacity of the subsea pipeline cross-section for pure buckling under the external pressure shall be determined by the formula

$$p_c \geqslant k_c p_{g\,\max} \qquad (3.3.5\text{-}1)$$

where p_c = bearing capacity of the pipeline cross-section, in MPa, determined by Formula (3.3.5-2);
κ_c = strength factor determined from Table 3.3.5;
$p_{g\,\max}$ = maximum external pressure acting on the pipeline, in MPa, determined by Formula (3.3.5-3);

$$p_c = \frac{p_y p_e}{\sqrt{p_y^2 + p_e^2}} k_f \qquad (3.3.5\text{-}2)$$

where p_e and p_y = critical loads in terms of elastic and plastic buckling determined by Formulae (3.3.3) and (3.3.4) respectively;
k_f = pipe out-of-roundness factor;

$$k_f = 1 - 0{,}043\left(88 - \frac{D_a}{t_c}\right)\sqrt{f_0} \qquad (3.3.5\text{-}3)$$

where f_0 = pipe out-of-roundness as determined by Formula (3.3.5-5).

$$p_{g\,\max} = \rho_w g(d_{\max} + h_w/2)10^{-6} \qquad (3.3.5\text{-}4)$$

where p_w = sea water density, in kg/m^3;
g = gravity acceleration, in m/s^2;
$d_{\max}$ = the highest still water level along the pipeline route, in m, taking into account tides and storm surges with 10^{-2} 1/year probability;
h_w = design wave height on a certain pipeline section, in m, with 10^{-2} 1/year probability.

$$f_0 = \frac{D_{a\,\max} - D_{a\,\min}}{D_a} \qquad (3.3.5\text{-}5)$$

where $D_{a\,\max}$ and $D_{a\,\min}$ = maximum and minimum outside diameter of the pipe respectively, in mm.

Table 3.2.6

Strength factors in terms of total stresses k_σ

Pipeline class	k_σ	
	For normal operational conditions	For short-term loads during construction and hydraulic tests
L, LI	0,8	0,95
L2	0,727	0,864
L3	0,696	0,826
G, G1	0,8	0,95
G2	0,762	0,905
G3	0,727	0,864

Table 3.3.5

Strength factor k_c for pipeline pure buckling calculation

Pipeline class	k_c
L, LI	1,5
L2	1,65
L3	1,8
G, GI	1,4
G2	1,5
G3	1,65

3.4 STEEL SUBSEA PIPELINE LOCAL BUCKLING ANALYSIS

3.4.1 Local buckling means buckling of the pipe initial shape in the form of breaking or distortion under the external hydrostatic pressure, longitudinal forces and bending moment.

3.4.2 Analysis of the subsea pipeline for buckling during laying under the loads referred to in **3.4.1** shall be made according to the inequality

$$\left(\frac{p_{g\,\max}}{p_c}\right)^{n_1}+\left(\frac{M}{M_c}\right)^{n_2}+\left(\frac{T}{T_c}\right)^{n_3}\leqslant 1/n_c \qquad (3.4.2\text{-}1)$$

where p_c = critical external pressure, which causes local buckling of the pipe, in MPa, and determined by Formula (3.3.5-2);

M_c = critical bending moment, in kNm, determined by the formula

$$M_c = (D_{int} + t_c)^2 t_c R_e 10^{-6}; \qquad (3.4.2\text{-}2)$$

T_c = critical longitudinal force, in kN, determined by the formula

$$T_c = \pi(D_{int} + t_c)t_c R_e 10^{-3}; \qquad (3.4.2\text{-}3)$$

$P_{g\,\max}$ = refer to Formula (3.3.5-4);

M = design bending moment determined with regard to lateral forces due to waves, wind, current and bending moments during pipeline laying by various methods, in kNm;

T = design longitudinal force determined with regard to longitudinal forces during pipeline laying by various methods, in kN;

p_c, M_c and T_c = bearing capacity of the pipeline with regard to certain types of acting loads (rated values of individual force factors, provided there are no other types of loads);

D_{int}, t_c and R_e = refer to Formula (3.3.4);

n_c = safety factor taken from Table 3.4.2 may be reduced upon agreement with the Register after performance of testing on the pipe specimens;

n_1, n_2 и n_3 = factors determined experimentally on the pipe specimens under the combined loads, using the procedure approved by the Register. Where inequality (3.4.2-1) is met at $n_1 = n_2 = n_1 = 1$, no more exact determination is further required.

Table 3.4.2

Safety factor n_c for pipeline local buckling analysis

Pipeline class					
L, LI	L2	L3	G, GI	G2	G3
1,2	1,4	1,6	1,1	1,3	1,5

3.4.3 In the calculations of subsea pipelines for buckling (collapse), the value of yield stress in compression under the combined effect of bending and compression shall be taken equal to 0,8 of the minimum pipe material yield stress.

3.5 STEEL SUBSEA PIPELINE PROPAGATION BUCKLING ANALYSIS

3.5.1 Propagation buckling means propagation of the local buckling of the subsea pipeline cross-section along the pipeline route. Propagation buckling occurs when the external hydrostatic pressure at large depths exceeds the critical value p_p.

3.5.2 The critical value of hydrostatic pressure p_p, in MPa, at which propagation buckling may occur is determined by the formula

$$p_p = 24R_e\left(\frac{t_c}{D_a}\right)^{2,4} \qquad (3.5.2\text{-}1)$$

where t_c = wall thickness of the pipe, in mm;

D_a = outside diameter of the pipe, in mm;

R_e = minimum yield stress of the pipe material, in MPa.

Propagation buckling may be avoided provided that the following inequality is met:

$$p_p \geqslant 1{,}2p_{g\,\max} \qquad (3.5.2\text{-}2)$$

where $p_{g\,\max}$ is determined by Formula (3.3.5-4).

Where inequality (**3**.5.2-2) is not met, structural measures shall be taken to prevent propagation buckling of subsea pipeline or its section.

3.5.3 In order to prevent propagation buckling (for subsea pipeline protection) the following measures shall be taken:

increase in wall thickness of the pipeline along with increase of the sea depth;

installation of buckle arresters.

3.6 STEEL SUBSEA PIPELINE FATIGUE ANALYSIS

3.6.1 General

3.6.1.1 Pipeline strength shall be checked in terms of fatigue criterion on the basis of the linear accumulated damage hypothesis (Miner's Rule):

$$\sum_{i=1}^{m}\frac{n_i(\Delta\sigma_i)}{N_i(\Delta\sigma_i)}\leqslant 1/n_y \qquad (3.6.1.1)$$

where m = number of stress blocks;

$n_i(\Delta\sigma_i)$ = number of stress cycles in each stress block;

$N_i(\Delta\sigma_i)$ = appropnate points on the pipe material fatigue curve in each stress block;

$\Delta\sigma_i$ = change in stresses during a stress cycle determined as an algebraic difference of the highest and the lowest stresses during a cycle;

n_y = safety factor taken in accordance with Table 3.6.1.1.

Table 3.6.1.1

Safety factor n_y for pipeline fatigue analysis

Pipeline class					
L, LI	L2	L3	G, G1	G2	G3
3,0	5,0	8,0	3,0	4,0	5,5

3.6.1.2 Fatigue strength assessment shall take into account asymmetric nature of cycle stress and two-dimensional stress of the pipe material.

3.6.1.3 The pipe material fatigue curve may be obtained by means of special tests or taken from an applicable international or national standard (such as GOST 25859-83) and agreed with the Register (refer to 5.5.7).

3.6.1.4 The following shall be taken into consideration in fatigue analysis:

operational cycles of pressure fluctuations between start and stop;

stress cycles during repeated pressure tests;

stress cycles caused by constraint of temperature deformation in operation;

vibration caused by vortex separation due to underwater currents;

periodical wave loads;

pipe geometry deviations from the regular round shape (including pipelines in operation following the results of inspections).

3.6.2 Dynamic response model for subsea pipeline under variable hydrodynamic loads.

3.6.2.1 In-line vortex-induced vibrations (VIV).

3.6.2.1.1 For a free span, the in-line amplitude response due to vortex shedding depends on the reduced velocity, V_R, the stability parameter K_S, the turbulence intensity I_c and the flow angle 0_{rel} (refer to **2**.7.5 to **2**.7.7).

3.6.2.1.2 The basic requirements for dynamic response model of free-span inline vibrations due to vortex shedding shall be found in Section **1** of Appendix 7.

3.6.2.2 Cross-flow vortex-induced vibrations (VIV).

3.6.2.2.1 For a free span, the cross-flow amplitude response due to vortex shedding shall be affected by several parameters, in the first place, the reduced velocity, V_R, the Keulegan-Carpenter number, KC, the current flow velocity ratio, α, the stability parameter, K_S.

3.6.2.2.2 The basic requirements for dynamic response model of free-span cross-flow vibrations due to vortex shedding shall be found in Section **2** of Appendix 7.

3.6.2.3 The dimensionless added mass factor for calculation, which applies for both smooth and rough pipe surfaces, shall be determined from the formula

$$C_a = \begin{cases} 0{,}68 + \dfrac{1{,}6}{1 + 5(d/D_a)} & \text{for } d/D_a < 0{,}8 \\ 1 & \text{for } d/D_a \geqslant 0{,}8 \end{cases} \qquad (3.6.2.3)$$

where d/D_a = refer to 2.5.3 and Appendix 6.

3.6.2.4 The eigen frequencies and eigen modes of vibrations of subsea pipeline with free spans will be determined on the basis of numerical modelling. In this case, it would be necessary to:

establish the static equilibrium position;

determine the eigen frequencies of pipeline vibration;

linearize the pipe-to-soil interaction problem;

assess the geometric non-linearity effects upon the dynamic response of the system under consideration.

3.6.2.5 The pipeline strength under vortex-induced vibrations will be verified by the fatigue criterion on the basis of **3.6.1**.

3.7 STEEL SUBSEA PIPELINE SEISMIC FORCES ANALYSIS

3.7.1 Under SLE, a subsea buried/crowned pipeline shall remain in normal operating condition with the following provision met:

$$\varepsilon_M \leqslant 0{,}1\ \% \qquad (3.7.1)$$

where ε_M = total bending strain of pipe metal, as determined by numerical methods on the basis of the Mises criterion (refer to Section 4 of Appendix 8).

3.7.2 Under DLE, no breaks or unsealing areas shall appear in a subsea pipeline. The following damages are permissible: pipe corrugation, local stability loss in pipe walls, overall pipeline stability loss, partial cracks in welds, if their size is permitted by performance standards (refer to **4.1.3** of the SP Guidelines).

3.7.3 The seismic resistance of a subsea pipeline under DLE shall be considered well warranted, if the following conditions are met.

3.7.3.1 The maximum value of the structural bending strains of pipe metal under Mises criterion, ε_M, shall not exceed **2** %.

3.7.3.2. Maximum compressive strain, ε_N, shall not exceed the axial pipe corrugation strains ε_C:

$$\varepsilon_N \leqslant \varepsilon_C. \qquad (3.7.3.2)$$

The pipe corrugation strain ε_C shall correspond to the peak point of the diagram 'longitudinal compression force — axial pipe corrugation and shall be determined by means of pipe testing at the RS-recognized laboratory or by the RS-approved calculation procedure.

To simulate the pipe behaviour in the process of stability loss, a calculation shall be made by numerical methods (refer to Section **4** of Appendix 8) and bearing the physical and geometrical non-linearity in mind.

3.7.3.3 The maximum tensile strain shall not exceed **2** %.

In this case, the following general requirement shall met:

$$R_{e,w} \geqslant R_e \qquad (3.7.3.3)$$

where $R_{e,w}$ = minimal yield stress of weld metal, in MPa;
R_e = minimal yield stress for base metal of the pipe, in MPa.

3.7.3.4 For the case of pipe bending strain, the following proportion shall be observed between the structural strain, ε_M and the critical strain, $\varepsilon_{l,cr}$:

$$\varepsilon_M/\varepsilon_{l,cr} \leqslant \theta \qquad (3.7.3.4\text{-}1)$$

where θ = pipe out-of-roundness parameter;

$$\varepsilon_{l,cr} = \frac{t_c}{2D_a}; \qquad (3.7.3.4\text{-}2)$$

$$\theta = \sqrt{\frac{1 + (\sigma^*_{cr})^2}{1 + (\sigma^*_{cr}/f)^2}} \qquad (3.7.3.4\text{-}3)$$

$$f = \sqrt{1 + \left(\frac{\theta_0 D_a}{t_c}\right)^2} - \frac{\theta_0 D_a}{t_c} \qquad (3.7.3.4\text{-}4)$$

where θ_0 = initial pipe out-of-roundness, which in the absence of actual data from the pipe supplier shall be adopted as permissible according to Table 4.5.5.3-2 for the pipe body;

$$\sigma^*_{cr} = \frac{\sigma_{cr}}{\psi R_e}; \qquad (3.7.3.4\text{-}5)$$

$$\sigma_{cr} = \frac{E}{1-\mu^2}\left(\frac{t_c}{D_a}\right)^2; \qquad (3.7.3.4\text{-}6)$$

for D_a, t_c, R_e, E, μ = refer to Formulae (3.2.5) and (3.3.3);
ψ = a reduction factor to be determined by the formula

$$\psi = \sqrt{1 - \frac{3}{4}\left(\frac{\sigma_x}{R_e}\right)^2} - \frac{1}{2}\frac{\sigma_x}{R_e} \qquad (3.7.3.4\text{-}7)$$

where σ_x = compressive longitudinal stresses, in MPa, which are conventionally considered to be positive.

3.7.4 Under SLE, a non-buried subsea pipeline shall remain in normal operation condition, and the following requirement shall be met:

$$\sigma_{max} \leqslant R_e \qquad (3.7.4\text{-}1)$$

where σ_{max} = total maximum stresses in the pipeline to be determined on the basis of 3.2.6.

Under a DLE, the requirement of 3.7.3.3 shall be complied with inclusive of the following:

$$\sigma_{max} \leqslant 1{,}1 R_e. \qquad (3.7.4\text{-}2)$$

A check of maximum shift values shall be made, as determined on the basis of numerical calculations.

3.7.5 The seismic resistance of a subsea pipeline shall be considered sufficient, if the above condition is met.

3.7.6 Where active tectonic zones intersect, an assessment of the stress-deformed state of subsea pipeline sections shall be made with due regard for eventual soil displacement.

3.7.7 The results of analytical and numerical solutions considered above shall be substantiated by laboratory or full-scale tests as required by the Register.

3.8 STRENGTH CALCULATION FOR STRUCTURAL COMPONENTS OF THE PIPELINE CONSISTING OF FLEXIBLE PIPES

3.8.1 Terms relating to unbonded flexible pipes.

Outer sheath means an extruded polymer layer used to protect the flexible pipe against the seawater, corrosion, abrasion and keep the axial armoring layer in design position.

Internal pressure sheath means an extruded polymer layer that ensures the pipe integrity (prevents leakage of transported medium in the environment).

Carcass means an interlocked metal construction that can be used as the innermost layer to prevent collapse of the internal pressure sheath (or pipe) due to radial loads (internal and external hydrostatic pressure, local loads).

Unbonded flexible pipe means a pipe construction consisting of separate unbonded (unglued) polymer and metal layers that allows relative movement between the layers.

Axial armoring layer means a structural layer made of the helically wounded metal stripes with a lay angle 20° to 55° that provides the pipe resistance to the axial forces and internal pressure.

Intermediate sheath means an extruded polymer layer that prevents the contact abrasion of metal layers.

Radial armoring layer means a layer made of the interlocked metal stripes with a lay angle close to 90° that increases the resistance of the flexible pipe to the local loads.

Insulation layer means a material layer with low thermal conductivity that provides insulating properties of the flexible pipe.

3.8.2 Terms related to the bonded flexible pipes.

Armoring layer means helically wound cable integrated in elastomeric material with a lay angle, as a rule, 55° to the generating line that is used to sustain, totally or partially, tensile loads and internal pressure.

Additional layer means a material layer with low thermal conductivity that provides insulating properties of the flexible pipe.

Liner means a layer of elastomeric material in contact with the transported fluid/gas that provides the pipe integrity.

Coating means a layer of elastomeric material in contact with the external environment that is used to insulate

the internal layers of the flexible pipe and prevent corrosion, abrasion and mechanical damage.

Bonded flexible pipe means a flexible pipe where metal reinforcement is integrated into solidified elastomeric material containing textile layers to obtain additional structural reinforcement or to separate elastomeric layers.

3.8.3 General requirements for the flexible pipe strength.

3.8.3.1 As a rule, design pressure of the flexible pipes shall generally comprise not less than 1,6 MPa. If the lesser values of the design pressure are used, the flexible pipes shall meet the requirements of Section 6, Part VIII "Systems and Piping" of the Rules for the Classification and Construction of Sea-Going Ships.

3.8.3.2 Calculations of the flexible pipe strength under operational, laying and testing loads shall be approved by the Register and executed by the procedure agreed with the Register. Calculation procedure shall be based on the national and international standards recognized by the Register as acceptable for use, e.g. ISO 13628-2 for unbonded flexible pipes and ISO 13628-10 for bonded flexible pipes.

3.8.3.3 The permissible bending radius of flexible pipes for storage/operation/ laying shall be determined by the manufacturer considering the criteria in **3.8.4** to **3.8.6** and be specified in technical documentation for pipes subject to the RS approval (refer to 1.5.3.3). For practical use in operation it is recommended to increase the maximum bending radius, as compared with the minimum one in storage (reeling the pipeline on the reel):

under static conditions of the flexible pipeline operation — by 10 %;

under dynamic conditions — by 50 %.

3.8.3.4 For flexible pipes, durability shall be calculated taking into account effects of creeping and strain ageing of polymer layers, corrosion and erosion for metal layers (refer to 1.5.3.3.9). Design durability shall exceed the planned service life of the pipe not less than 10 times.

3.8.3.5 The values of design parameters of pipe resistance (to external and internal pressure, tensile, torsion), as well as the bending radius of the flexible pipe are subject to confirmation upon the results of type tests (refer to **4.2.4**).

3.8.4 Strength requirements for polymer layers of unbonded flexible pipes.

3.8.4.1 In unbonded flexible pipes, the limiting condition of polymer layers shall be determined on the basis of the strains crtiteria, i.e. ultimate strain creep-ingn and ultimate bending strain.

3.8.4.2 For any load combination, the maximum permissible wall-thickness reduction of inner insulation sheaths due to material creep shall not to exceed 30 %.

3.8.4.3 The maximum permissible bending strain of inner insulation sheaths in flexible pipes shall not exceed:

7,7 % for polyethylene and polyamide;

7,0 % for polyvinylidene fluoride under static pipe service conditions and for the storage of pipes designed for dynamic service conditions;

3,5 % for polyvinylidene fluoride under dynamic service conditions.

3.8.4.4 The maximum permissible strain of the outer sheath made of polyethylene and polyamide shall not exceed 7,7 %.

3.8.4.5 For other polymer materials, the maximum permissible strains shall be established on the basis of technical documentation by which compliance with design requirements for ultimate strain is confirmed and which is approved by the Register.

3.8.5 Strength requirements for polymer layers in bonded flexible pipes.

3.8.5.1 The limiting condition of polymer layers in bonded flexible pipes shall be determined on the basis of the strain criterion: the maximum permissible strain of polymer layers shall not to exceed the ultimate strain of aged material more than 50 %.

3.8.6 Strength and stability requirements for metallic layers in flexible pipes.

3.8.6.1 The strength criterion for the metallic layers of flexible pipes shall meet the condition:

$$\sigma_i \leqslant k_i \min(R_e;\ 0{,}9R_m) \qquad (3.8.6.1)$$

where σ_i = the maximum design stress in layer, in MPa;
R_e = the minimum yield stress of the layer metal, in MPa;
R_m = tensile strength of the layer metal, in MPa;
k_i = safety factor according to Table 3.8.6.1.

Table 3.8.6.1

Safety factors for calculating the flexible pipe strength k_i

	Type of loading acting on flexible pipes in:		
	operation	laying	hydraulic testing
Armoring layers of bonded flexible pipes	0,55	0,67	0,91
Layers of unbonded flexible pipes:			
axial armoring layer	0,67	0,67	0,91
carcass and radial armoring layer	0,55	0,67	0,91

Note. Where accidental (emergency) service loads shall be taken into consideration, the safety factor shall be increased by a value agreed with the Register.

3.8.6.2 The flexible pipe carcass shall be designed for buckling, at that the safety factor with regard to the critical stress value k_{ib} shall be equal to

$$k_{ib} = 0{,}67 \text{ if } (d_{\max} + h_w/2) \leqslant 300 \text{ m}; \qquad (3.8.6.2\text{-}1)$$

$$k_{ib} = \left[\frac{(d_{\max} + h_w/2) - 300}{600}\right] 0{,}18 + 0{,}67$$

$$\text{if } 300 < (d_{\max} + h_w/2) < 900 \text{ m}; \qquad (3.8.6.2\text{-}2)$$

$$k_{ib} = 0{,}85 \text{ if } (d_{\max} + h_w/2) \geqslant 900 \text{ m} \qquad (3.8.6.2\text{-}3)$$

where $d_{\max}$ and h_w = values determined by Formula (3.3.5-4).

3.8.7 **Local strength criteria of the flexible pipe in the zone of branch connection.**

3.8.7.1 The end fitting design shall ensure its combined action with the sheath of a flexible pipe. The limiting state of the zone of joining the fitting and the pipe sheath shall be determined for all possible load combinations in accordance with the relation:

$$(\sigma_t, \sigma_e) \leqslant k_f R_e \qquad (3.8.7.1)$$

where σ_t = tensile tangential stress, in MPa;
σ_e = equivalent (Mises) stress, in MPa;
R_e = the minimum yield stress of the material, in MPa;
k_f = safety factor equal to (refer to Note in Table 3.8.6.1):
0,55 for operational conditions;
0,67 in laying;
0,91 for hydraulic testing.

4 MATERIALS

4.1 GENERAL

4.1.1 The requirements of this Section cover the materials and products of carbon, carbon-manganese, low-alloy steel, and flexible pipes intended for subsea pipelines, which are subject to the Register technical supervision.

4.1.2 The requirements to the subsea pipeline steels shall take into account the features for both liquid pipelines (including oil, chemical and water pipelines) and gas pipelines in compliance with the subsea pipeline classification — refer to **1**.3.3.

4.1.3 According to subsea pipeline classification (refer to **1**.3.3) the requirements to the subsea pipeline steels shall take into account various pipeline reliability levels:

L, G — steel with basic level of requirements (for pipelines with basic level of reliability);

L1, G1 — steel with additional requirements (for pipelines with high level of reliability);

L2, G2 — steel with additional requirements to corrosion resistance in aggressive media (for transportation of corrosive media);

L3, G3 — steel with additional requirements to viscosity and plasticity (for pipelines in seismically active regions and for ice resistant standpipes).

While specifying multiple requirements to steel for subsea pipelines (for example, for transportation of aggressive media in seismically active regions) the requirements of various reliability levels shall be combined.

4.1.4 Steels that differ in chemical composition, mechanical properties, supply condition or manufacturing procedure from those indicated in this Section are subject to special consideration by the Register. In this case the data confirming the possibility of these materials application in accordance with their purpose shall be submitted. It is allowed, upon agreement with the Register, to use materials that meet the requirements of national and/or international standards.

4.1.5 For the flexible subsea pipelines, which meet the requirements of the SP Rules, an additional distinguishing mark is added to the character of classification, in accordance with **1**.3.3. The requirements for the flexible pipes are specified by the Register, depending on the pipeline purpose (refer to **4.2.4**).

4.1.6 The materials subject to the RS technical supervision shall be produced by the manufacturers recognized by the Register and having the relevant document - the Recognition Certificate for Manufacturer (СПИ) (form **7.1.4.1**)/Type Approval Certificate (СТО) (form **6.8**.3) (refer to **4.2.1**).

4.1.7 The general provisions regulating the scope and procedure of technical supervision of materials are specified in Section 5, Part I "General Regulations for Technical Supervision" of the Rules for Technical Supervision During Construction of Ships and Manufacture of Materials and Products for Ships and in **1**.3, Part XIII "Materials" of the Rules for the Classification and Construction of Sea-Going Ships.

4.1.8 Manufacture, check and tests of steel spiral-welded pipes as well as recognition of their manufacturers are subject to special consideration by the Register.

4.2 SURVEY AND TECHNICAL SUPERVISION

4.2.1 Survey and recognition of firms (manufacturers) of materials and products.

4.2.1.1 The firms manufacturing materials and products in compliance with the requirements of this Section shall be, as a rule, recognized by the Register prior to commencement of manufacture of products. For this purpose, survey of the firm (initial survey) shall be carried out, and comprise the following:

4.2.1.1.1 Review and approval of the firm's (manufacturer's) technical documentation specifying the properties of materials and conditions of production. As for the production of pipes, the following basic information on the production process of pipes shall be submitted:

.1 for all pipes:

description of pipe identification and traceability in the production process, including the check status and data keeping;

steel manufacturer;

methods of steel production and casting;

required chemical composition and grade of steel;

hydrostatic test procedure;

non-destructive testing procedures;

.2 additionally for welded pipes:

production method and supply condition of rolled plates;

pipe forming procedures, including edge preparation and form check;

welding procedure;

specified cold expansion coefficient, if applicable;

pipe heat treatment procedure, including heat treatment of weld during welding, if applicable;

.3 additionally for seamless pipes:

pipe forming procedure;

pipe heat treatment procedure.

4.2.1.1.2 Familiarization with the production and the quality control system of the firms, carrying out check testing. While taking the above actions, a

compliance of the manufacture parameters and the products with the requirements of the submitted documentation and the RS Rules of the Register shall be confirmed, as well as the appropriate level of quality stability;

4.2.1.1.3 Drawing-up of the survey results in compliance with the requirements of the Nomenclature of items of the RS technical supervision of subsea pipelines (refer to **1.6** of the SP Guidelines) — the Recognition Certificate for Manufacturer (СПИ) (form 7.**1.4.1**) or Type Approval Certificate (СТО) (form 6.8.**3**) (if the results are satisfactory).

4.2.1.2 All the procedures necessary for obtaining the Recognition Certificate for Manufacturer (form 7.**1.4.1**) and Type Approval Certificate (form 6.8.**3**) and the documents, confirming the recognition of the firms and its products by the Register shall be executed in accordance with the requirements of Section **2**, Part III "Technical Supervision During Manufacture of Materials" of the Rules for Technical Supervision During Construction of Ships and Manufacture of Materials and Products for Ships and **1.7**, **1.8** of the SP Guidelines based on the application of the firms.

4.2.1.3 Where rolled products and/or tubular billets are supplied to the tube-rolling mill by other firms, the manufacturers of the above mentioned semi-finished products shall be recognized by the Register (have the Recognition Certificate for Manufacturer (form 7.**1.4.1**)).

4.2.2 Surveys during manufacture/technical supervision.

4.2.2.1 All materials and products manufactured in compliance with the requirements of this Section shall be subject to survey during manufacture including surveys and tests in the scope specified in this Section and/or technical documentation approved by the Register.

4.2.2.2 Technical supervision during manufacture includes the following:

tests and inspection;

issue of the RS documents.

4.2.3 Testing of steel rolled products and pipes.

4.2.3.1 General.

4.2.3.1.1 Testing methods and procedures shall be selected in compliance with the requirements of **4.3**. Special testing procedures as well as the relevant evaluation criteria, if no instructions are specified in the SP Rules, shall be agreed with the Register.

4.2.3.1.2 Where the tests cannot be carried out at the firms's (manufacturer's) of manufacturer of the products to be approved, the required tests shall be conducted in the laboratory recognized by the Register.

4.2.3.1.3 The requirements for the RS technical supervision during manufacture of steel rolled products and pipes shall comply with **2.2** to **2.4** of the SP Guidelines.

4.2.3.2 Check tests during recognition of firm (manufacturer).

4.2.3.2.1 Testing shall be conducted in compliance with the program submitted by the firm (manufacturer) and approved by the Register. The program is compiled on the basis of the respective requirements of this Section (refer to **4.2.3**.5), national and/or international standards and other technical documentation approved by the Register.

4.2.3.2.2 Testing shall be eamed out in the presence of the RS representative following the procedures agreed with the Register.

The site and time of the tests shall be specified by the manufacturer in advance. Sampling, test procedures, specimen cutout diagrams shall be effected in compliance with the applicable requirements of the SP Rules (refer to **4.3**) and the relevant standards.

4.2.3.3 Tests during manufacture

4.2.3.3.1 Testing shall be conducted in compliance with the requirements of the SP Rules and the documentation on the products to be delivered approved by the Register. The tests shall be also carried out in the presence of the Register representative.

4.2.3.4 Unsatisfactory test results.

4.2.3.4.1 Where the test results are unsatisfactory, the requirements of **2.2.1**.5 of the SP Guidelines shall be met.

4.2.3.5 The scope of tests during recognition of firms (manufacturers) (initial survey).

4.2.3.5.1 The scope of pipe tests is determined considering the requirements specified in Table **4.2.3**.5.**1** and in the test program prepared by the firm and approved by the Register.

Generally, samples specimens for seamless pipes testing are cut directly from the pipes, and those for testing welded pipes testing — from the rolled product, pipe body and weed.

During the manufacture survey the Register shall test the weldability both during seamless pipes manufacture and during manufacture of steeled product/steeled pipes.

4.2.3.5.2 Scope of rolled product testing — pipe billets (skelp) shall be determined considering the requirements Table **4.2.3**.5.**1**. For each technological process tests shall be performed on **2** batches. The batch shall consist of **3** plates of one grade, steel cast and similar thickness. Plates submitted for testing shall be selected one after another in the course of rolling.

Table 4.2.3.5.1

Scope of tests for recognition of material manufacturer

Type of test	Type of material	Position of samples and place of specimen cuttoff	Number of			Notes
			casts/plates, pipes/samples taken from a cast	specimen taken from a plate, pipe	Total number of specimens	
Chemical analysis (4.3.4)	pipe	from one end	2/10/1	1	2	Complete analysis of metal, including microalloying and ladle sample
	rolled product		2/3/3		6	
Tensile tests (4.3.2)	pipe	longitudinal and transverse, from both ends	2/10/10	4	80	R_{eH}, R_m, A_5, Z are determined
	rolled product	transverse, from both ends	2/3/3	2	12	
Compression test after tension (4.3.2)	pipe	—	—	—	—	—
	rolled product	transverse, from one end	2/3/3	2	12	Value of R_{eH} is determined under compression
Compression test (4.3.2)	pipe	transverse, from one end	2/10/1	2	4	Value of R_{eH} is determined under compression
	rolled product	—	—	—	—	—
Bend test (4.3.9.4 and 5.2.2.3.2)	pipe	transverse, from both ends	2/10/2	2	8	Bend angle is determined
	rolled product	—	—	—	—	—
Impact bending test to establish transition curve (4.3.3; 4.3.3.3)	pipe	transverse, from one end	2/10/3	9	54[1]	Test temperature: 0, −20, −40, −60, −80 °C depending on operating temperature
	rolled product	transverse, from both ends	2/3/3	18	108[1]	
Impact bending test of factory welding joint (4.3.3, 5.1.2.3.1)	pipe	transverse, from both ends	2/10/1	72	144[1]	Test temperature: 0, −20, −40, −60, −80 °C depending on operating temperature
	rolled product	—	—	—	—	
Impact bending test on strain aged specimens (4.3.3)	pipe	—	—	—	—	Test temperature: 0, −20, −40, −60, −80 °C depending on operating temperature
	rolled product	from one end (upwards) transverse, 1/4 of the width	2/3/3	9	54[1]	
Sulphur segregation (4.3.4)	pipe	from one end	2/10/2	1	4	—
	rolled product	from one end	2/3/3	1	6	
Metallography (4.3.5)	pipe	from one end	2/10/2	1	4	—
	rolled product	from one end	2/3/3	1	6	
Corrosion test[2] (4.3.9.5)	pipe	from one end	2/10/2	6	24	—
	rolled product	from one end	2/3/1	6	12	
Drop-weight tear test DWTT[3] (4.3.9.2, Section 1 of Appendix 4)	pipe	transverse, from one end	2/10/1	10	20	Critical temperature determination
	rolled product	transverse, from one end	2/3/1	10	20	
Test as per T_{kb}[4] method (4.3.9.6)	pipe	—	—	—	—	Critical temperature determination
	rolled product	transverse, from one end	2/3/3	10	60	

Table 4.2.3.5.1 — continued

Type of test	Type of material	Position of samples and place of specimen cuttoff	Number of			Notes
			casts/plates, pipes/samples taken from a cast	specimen taken from a plate, pipe	Total number of specimens	
Test to determine nill-ductility temperature NDT[4] (4.3.9.7)	pipe	longitudinal from one end	2/10/2	8	32	Critical temperature determination
	rolled product	transverse, from one end	2/3/3	8	48	
CTOD[5] (crack tip opening displacement) test of the base material (4.3.9.3 and Section 2 of the Appendix 4)	pipe	transverse, from one end	2/10/1	9	18[1]	Test temperature: 0, −20, −40, −60, −80 °C depending on operating temperature
	rolled product	transverse, from one end	2/3/1	9	18[1]	
Non-destructive testing (4.3.8)	pipe	each product	2/10/10	—	—	—
	rolled product	each product	2/3/3	—	—	
Hydraulic pressure test (4.3.7)	pipe	each product	2/10/10	—	—	—
	rolled product	—	—	—	—	
Weldability test[6] (5.2)	pipe	—	—	—	—	According to a separate test program approved by RS
	rolled product	—	—	—	—	

[1]Here the number of specimens is determined based on testing at three temperature values specified in the test program approved by the Register.
[2]For rolled product and pipes of class L2 and G2.
[3]Except rolled product and pipes for L — L2 pipelines, as well as for any pipes with the diameter less than 500 mm.
[4]Except rolled product and pipes for L — L2, G pipelines.
[5]Except rolled product and pipes for L and G pipelines.
[6]Program for weldability test is made in order to recognise the manufacturer, and to approve welding procedures used for pipeline installation. These programs are submitted as Appendices to the General test program.

Rolled product characteristics shall meet the requirements of 4.5, technical specifications for steel supply approved by the Register and/or national or international standards.

When the plates of various thickness and dimensions are manufactured according to the uniform technology (including heat treatment modes), it is permitted to perform testing of rolled product having the maximum (first batch) and the minimum (second batch) thickness upon agreement with the Register. In this case statistical data (chemical composition, mechanical properties) shall be submitted additionally confirm the quality stability of the rolled product supplied. Scope of sampling shall be approved by the Register.

4.2.3.5.3 Scope of pipe testing shall be determined considering the requirements specified in Table **4.2.3**.5.1. For each technological process and pipe size the tests to verify the consistency of product performance shall be carried out on **2** batches of 10 pipes.

The batch shall consist of pipes of the same grade, steel cast, similar heat treatment mode and similar wall thickness. For testing the pilot pipe batch shall be manufactured with the maximum ratio of the pipe wall to the diameter and in the course of testing the pipes having the maximum values of the ratio of yield point to ultimate strength (according tor the tensile test results) shall be selected for mechanical tests from the pilot batch.

The results of pipe tests shall meet the requirements of 4.5, technical specifications for pipe supply approved by the Register and/or national or international standards.

4.2.3.5.4 Where special material properties required to be confirmed based on the application conditions, the results shall be additionally submitted or relevant tests carried out confirming these properties, e.g. tension at high temperature, fatigue tests, etc.

4.2.3.6 Scope of testing during manufacture.

4.2.3.6.1 As a rule, technical supervision for manufacturing pipe steel and pipes shall be carried out by the Register at the manufacturers recognized by Register (refer to **4.2**.1). Scope of testing during manufacture shall be determined by technical documentation for product delivery approved by the Register, national/international standards recognized by the Register and the requirements of this Section

(refer to Table 4.2.3.6.1). The minimum required scope of testing is specified in Table 4.2.3.6.1.

4.2.3.6.2 In general, one pipe from a batch of 50 pipes shall be selected for testing:

.1 for seamless pipes, the batch shall consist of pipes having the similar grade, steel cast, heat treatment mode, diameter and wall thickness;

.2 for welded pipes, the batch shall consist of pipes having the similar diameter and wall thickness, manufactured under the same process and production conditions. The batch shall have similar cold expansion coefficient of pipes with the difference between its maximum and minimum value not exceeding 0,4 %. Whenever possible, the batch shall be composed of the pipes welded by the same welding machine, or the additional pipe welded by each welding machine shall be tested at the intervals specified in the technical documentation for the pipes;

.3 for pipes intended for pipelines with the minimum operating temperature of –20 °C and below, the bending impact test may be performed on each fifth pipe up on the RS request.

4.2.3.6.3 Testing of rolled product of pipe steel shall be carried out on the samples chosen from one plate of

Table 4.2.3.6.1

Scope of tests during manufacture

Type of test	Type of material	Position of samples, direction of cutting of specimens	Number of			Notes
			casts/plates, pipes/cast samples	specimens of a plate, pipe	total number of specimens	
Chemical analysis (4.3.4)	pipe	from one end	1/50/1	1	1	General analysis, including micro-alloying and ladle sample
	rolled product		1/50 t/1			
Tensile test of base metal (4.3.2)	pipe	transverse, from one end	1/50/1	2	2	R_{eH}, R_m, A_5 are determined
	rolled product	transverse, from one end	1/50 t/1			
Tensile tests of welding joint (4.3.2)	pipe	transverse, from one end	1/50/1	2	2	R_m is determined
	rolled product	—	—	—	—	—
Bending impact test of base metal (4.3.3)	pipe	transverse, from one end	1/50/1	3	3	Testing at temperature determined by the minimum operating temperature[1] with due regard to 4.3.3.6
	rolled product	transverse, from one end	1/50 t/1	3	3	
Bending impact test of welding joint (4.3.3)	pipe	transverse, from one end	1/50/1	12	12	Testing at temperature determined by the minimum operating temperature[1] with due regard to 4.3.3.6
	rolled product	—	—	—	—	
Determination of fracture type as per the procedure of Drop-weight tear test (DWTT[2]) (4.3.9.2, Section 1, Appendix 4)	pipe	transverse, from one end	1/50/1	2	2	Testing at temperature determined by the minimum operating temperature
	rolled product	transverse, from one end	1/50 t/1	2	2	
Bending test (4.3.9.4 and 5.2.2.3.2)	pipe	transverse, from one end	1/50/1	2	2	Normal and root-bend testing
	rolled product	—	—	—	—	—
Vickers hardness (4.3.5)	pipe	transverse, from one end	1/50/1	3	3	One metallographic section: pipe metal, seam and heat-affected zone
	rolled product	—	—	—	—	—
Non-destructive testing (4.3.8)	pipe	every product	1/50/50	—	—	—
	rolled product	every product	1/50 t/50 t	—	—	

Table 4.2.3.6.1 — continued

Type of test	Type of material	Position of samples, direction of cutting of specimens	Number of			Notes
			casts/plates, pipes/cast samples	specimens of a plate, pipe	total number of speci-mens	
Hydraulic pressure test (4.3.7)	pipe	every product	1/50/50	—	—	—
	rolled product	—	—	—	—	
Remanent magnetization (4.3.10)	pipe	at both ends	1/50/1	4	4	Not more than 2 mT (20 Gs)
	rolled product	—	—	—	—	

[1]When the data of the minimum operating temperature is missing, testing shall be carried out at the temperature equal to −40 °C.
[2]Except the rolled products and pipes intended for L — L2 pipelines, as well as for any pipes with the diameter less than 500 mm.

the batch. The batch shall consist of plates with similar cast, similar delivery condition and similar size. Unless otherwise specified, the batch size shall not exceed 50 t.

4.2.4 Tests of flexible pipes.

4.2.4.1 General.

4.2.4.1.1 Tests of flexible pipes are conducted:

to the extent of the tests during the RS surveys of the manufacturer for issue the Type Approval Certificate (form 6.8.3) in compliance with 2.6.1 of the SP Guidelines;

to the extent of tests during the flexible pipe manufacture.

4.2.4.2 Type tests of flexible pipes.

4.2.4.2.1 Type tests of the flexible pipes are conducted according to the programme agreed with the Register. The programme shall be based on the requirements of the SP Rules, national and/or international standards or other RS-approved technical documentation.

4.2.4.2.2 Type tests are conducted to confirm the basic design parameters of the pipes of a certain dimension-type series, which range shall be determined taking into account the following:

internal/external diameter;

number and purpose of layers;

design of metallic and polymeric layers;

manufacturing processes, including lay angles;

transported medium;

internal/external temperature of the medium;

operational conditions and service life.

4.2.4.2.3 Each type of flexible pipes shall pass type tests, which are generally conducted to the fracture of specimens and shall include:

internal pressure burst tests;

hydrostatic buckling (collapse) tests;

tension tests;

bending stiffness tests (checking the minimum bending radius of flexible pipes);

torsion resistance tests.

4.2.4.2.4 One to three specimens for each type test are sampled from each type of flexible pipes. During manufacture of this type of pipes of various diameters, it is allowed to conduct the tests on the pipes of the maximum diameter.

4.2.4.2.5 Content of type tests for flexible pipes may be changed depending on the pipe purpose upon agreement with the Register. Types and number of tests may be also detailed by the Register on the basis of the preliminary information submitted by the Register: availability of certificates of another classification societies, recognition of manufacturer, etc.

4.2.4.2.6 Methods and results of the type tests shall meet the requirements of 2.6.5.2 of the SP Guidelines.

4.2.4.3 Tests during manufacture of flexible pipes.

4.2.4.3.1 Tests during manufacture of flexible pipes are conducted in compliance with the requirements of the SP Rules according to the programme approved by the Register and developed on the basis of the national and/or international standards.

4.2.4.3.2 Each flexible pipe after manufacture shall be subjected to:

drift test;

hydrostatic internal pressure test;

adhesion test (for bonded flexible pipes only);

vacuum tests (for bonded flexible pipes only).

4.2.4.3.3 Depending on the flexible pipe purpose, the special tests are conducted by agreement with the Register, namely:

tests for electrical resistance measurement (for flexible pipes with an internal carcass and when using the cathodic protection of end fittings);

tests of the capability to be operated at low temperatures, i.e. cold resistance (where the pipe sections above the water surface are provided);

tests for resistance to corrosive transported media;

fire tests (where the pipe sections above the water surface are provided).

Scope of specialized tests shall be agreed with the Register, proceeding from the operational conditions of the pipes.

4.2.4.3.4 Test procedures and results shall meet the requirements of 2.6.5.3 of the SP Guidelines.

4.3 PROCEDURES OF TESTING PIPES AND STEEL ROLLED PRODUCTS

4.3.1 General.

4.3.1 Unless otherwise specified, the rolled products and pipes shall be tested in compliance with the requirements of the SP Rules, Section 2, Part XIII "Materials" of the Rules for the Classification and Construction of Sea-Going Ships and national and international standards and the documentation agreed with the Register.

4.3.1.1 Testing of pipes shall be carried out in compliance with the requirements of national and international standards and/or documentation approved by the Register:

for seamless pipes — after final heat treatment;

for welded pipes — after final moulding (volume expansion) and hydraulic tests.

Unless otherwise specified, for pipes with the diameter up to 300 mm the samples for tensile test shall be taken parallel to the pipe axis and for the pipes with the diameter above 300 mm — in the longitudinal and transverse directions.

4.3.1.2 Depending on steel grade, strength level and test type, samples shall be taken from the rolled products in compliance with the requirements of 3.2.5, 3.13.5 and 3.14.4, Part XIII "Materials" of the Rules for the Classification and Construction of Sea-Going Ships, Section 2, Part XII "Materials" of the Rules for the Classification, Construction and Equipment of MODU/FOP considering provisions of this Section.

4.3.1.3 The specimens for tensile and impact tests shall be manufactured in compliance with the requirements of 2.2, Part XIII "Materials" of the Rules for the Classification and Construction of Sea-Going Ships.

4.3.2 Base metal tensile and compression tests.

4.3.2.1 Tensile tests for plate shall be carried out on flat specimens with full thickness. Test samples shall be cut out so that the middle of the specimen working part was at a distance of one quarter of the width from the plate edge, the specimens shall be located transverse to rolling direction.

4.3.2.2 During the initial survey performed by the Register for the purpose of recognition of the manufacturer, testing for longitudinal and transverse metal tension for the thickness less and equal to 20 mm shall be carried out at full thickness specimens. When the pipe wall thickness is above 20 mm, the tests shall be performed both on cylindrical specimens and specimens with the thickness equal to the pipe thickness. In case of big difference between the test results of both specimen types, the Register may require to perform layer-by-layer determination of the standard properties on cylindrical specimens and separate approval of the procedure for flattering of full thickness specimens during the tests in the course of manufacture. Samples shall be cut out from the welded pipes so that the middle of the specimens working part was located at an angle of 90° to the pipe weld seam.

4.3.2.3 Rolled product metal shall be tested for compression on the double cylindrical specimens after preliminary 2 % tension to determine the yield point (Bauschinger effect), two specimens shall be taken from the plate.

4.3.2.4 Base pipe metal shall be subject to compression testing on double-cylindrical specimens; during manufacture straightening of gripped sections only is allowed.

4.3.2.5 When testing base pipe metal compressive yield stress reduction up to 20 % shall be allowed as compared to the minimum tensile yield stress, unless otherwise specified by the Register.

4.3.3 Impact test.

4.3.3.1 Test samples shall be cut out from the rolled product at one quarter of the plate width and from the welded pipe at an angle of 90° to the weld seam. Tests shall be carried out on V-notch specimens. Besides impact energy, percentage of tough (brittle) component shall be determined.

4.3.3.2 Charpy V-notch specimens shall be made without flattening of samples; specimen notch axis shall be perpendicular to the surface. Thickness of specimens shall be selected as maximum out of the following values: 10 mm; 7,5 mm; 5 mm.

When it is impossible to cut out from a pipe the transverse test specimens of 5 mm thickness, the longitudinal specimens shall be tested. Impact tests are not carried out if the wall thickness is 5 mm or less.

4.3.3.3 Specimens with a notch on the arc weld metal shall be cut out across the weld in four positions as shown in Fig. **4.3.3.3-1**. The distance from the fusion line is measured in the middle of specimen thickness as shown in Fig. **4.3.3.3**-2.

4.3.3.4 The specimens shall be taken at a depth of not more than 2 mm. Where wall thickness exceeds 25 mm, additionally the specimens shall be taken from mid-thickness of the wall, except for tangents or bend/fitting.

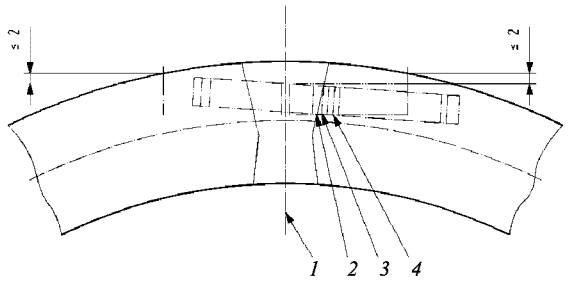

Fig. 4.3.3.3-1
Charpy V-notch specimens position relative to arc weld
(three specimens from each position):
1 – centre of weld; *2* – fusion line; *3* – fusion line + 2 mm;
4 – fusion line + 5 mm

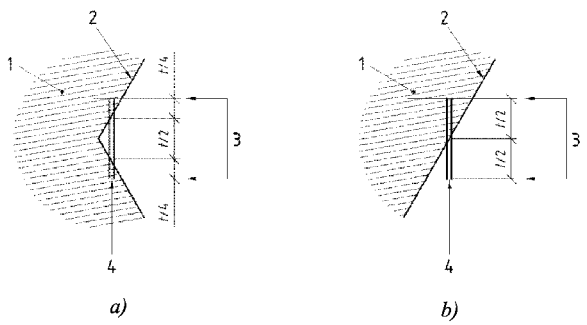

Fig. 4.3.3.3-2
Notch positions of Charpy V-notch specimens against fusion line:
a – symmetrical bevel; *b* – unsymmetrical bevel;
1 – weld metal; 2 – fusion line;
3 – positions of specimen side surfaces; *4* – positions of notch

Additionally the portion of the fibrous component in fracture of all specimens shall be measured, except for the specimens from the centre of weld. The acceptance criterion makes up 50 % of the fibrous component in fracture on average for three specimens; one specimen is allowed to have the minimum of 40 %.

The specimen from the welds made with high-frequency current shall be taken across the weld: one series in the centre of the weld and one at a distance of 2 mm from the centre of the weld.

4.3.3.5 While conducting bending impact test of base metal during initial survey of pipe manufacture it is required to make a function of test results based on three temperature values from the following ones: 0, −20, −40, −60, −80 °C. The testing temperature values shall be specified in the test program subject to the RS approval. Upon the RS request, bending impact tests shall be be carried out on the rolled metal and pipe metal.

4.3.3.6 During manufacture of rolled products and pipes under the RS technical supervision bending impact tests of base metal and welding joint shall be carried out at the temperature specified in technical specifications or contractual documentation for the products but not exceeding T_p −10 °C for pipes with the wall thickness below or equal to 20 mm and not exceeding T_p −10 °C for pipes with larger wall thickness. Temperature T_p shall be be determined as per 4.4.3.

4.3.3.7 Where steel grades not specified in the Rules are used, the tests may be conducted at design temperature. The test temperature shall be determined when approving the documentation on supply of pipes. To ensure comparability of test results for different steel grades the temperature closest to the least in the temperature range specified in 4.3.3.5.

In any case, the test temperature shall be stated in quality certificates issued by the firm (manufacturer).

4.3.3.8 Strain ageing sensitivity tests shall be carried out during initial survey of manufacture on specimens cut out from the rolled product; samples shall be selected similar to impact tests samples. Metal strips from which specimens are cut out shall be subjected to tensile strain by the value corresponding to the maximum permissible one for the pipe bending, as a rule, up to 5 %.

Impact test specimens made of strips subjected to tensile strain are subject to even heating (artificial ageing) up to 250 °C, with 1 h exposure at this temperature and subsequent cooling in the air.

Impact tests shall be carried out at room temperature (within 18 to 25 °C) and at temperature corresponding to 4.3.3.6. Unless otherwise specified, tests are carried out at initial survey of the manufacturer, at steel production process alterations and in doubtful or arguable cases related to the rolled products quality, as deemed necessary by the RS surveyor.

4.3.4 Chemical analysis, sulphur segregation.

Chemical analysis and sulphur segregation samples shall be taken from the center of the plate width, and in case of the welded pipe — from the side opposite to the weld seam.

4.3.5 Metallography and hardness measurements.

4.3.5.1 Macro structural analysis is carried out to determine strained structure, discontinuities, flakes etc. As a rule, for macro structural analysis transverse specimens are taken from the forward end of prototype semi-finished product or head of the breakdown. Unless otherwise specified, the macro structural analysis is required at the initial survey of the manufacturer, at production process alterations and, as deemed necessary by the RS surveyor, in doubtful or arguable cases related to the quality of the rolled products to be supplied.

4.3.5.2 Micro structural analysis is carried out to determine steel grain size. The samples for metallographic analysis shall be taken from 1/4 ± 1/8 of the plate width or the pipe and from a position located at an angle of 90° to the pipe weld seam. The photographs shall be representative of the surface structure, one quarter and one half of the plate thickness. The photomicrographs shall be taken at X100 and X400 magnification. The grain size and original grain shall be determined. Unless otherwise specified, the micro structural analysis is required at the initial survey of

the manufacturer, at production process alterations and, upon the RS syrveyor demand, in doubtful or arguable cases related to the quality of the rolled products to be supplied.

The microstructure of finished rolled products, pipes and bends/fittings shall be continuous in base metal; the same of welded elements shall be continuous in the weld and heat-affected zone (HAZ). The type of microstructure and actual size of grain shall be specified in the report.

4.3.5.3 Metallographic analysis may be carried out on the polished sections intended for hardness measurement prior to hardness measurement.

The photographs of bends/fittings shall include the external surface of base metal of the bent part and transition zones. For clad steel additionally the photograph of cladding layer shall be made.

4.3.5.4 Hardness on transverse polished sections shall be measured in the points shown in Fig. 4.3.5.4. In case of single-sided arc welding and wall thickness of up to 25 mm inclusive, it is allowed not to take measurements in the middle of thickness.

Hardness of pipe surfaces shall be measured round the circumference on one of the end faces. For bends/fittings, round one circumference near each end face and on each bent section (depending on the type of bend/fitting).

The points are positioned in four zones on the circumferences at an angle of 90° to each other. For inspection of bent areas of bends/fittings the points are arranged on two neutral axes, bend intrados and extrados. During measurements the mean value for three points in each zone shall be determined.

4.3.6 Weldability.

The weldability tests at the initial survey of the manufacturer shall be carried out in compliance with the requirements stated in 5.2 Part I "Subsea Pipelines". The weldability tests, unless otherwise specified, shall cover all possible welding methods during manufacture and installation of the pipeline including repair welding.

4.3.7 Hydraulic pressure tests.

Each pipe shall be subjected to hydraulic pressure test. The information concerning the test pressure calculation method shall be submitted.

The instrumentation shall be duly checked and calibrated.

The reports shall contain the information concerning the pressure applied and the duration of tests for each pipe. The holding time times at test pressure shall be not less than 10 s.

The hydraulic pressure tests may be omitted on the pipes manufactured on *U*-shaped and *O*-shaped bending presses. In this case, the proposed alternative method of checking the pipe strength and continuity shall be subject to special agreement with the Register as soon as the data indicating the equivalence of methods are submitted.

4.3.8 Non-destructive testing.

4.3.8.1 General.

4.3.8.1.1 The non-destructive testing shall be carried out during the check (qualification) tests and the production process in compliance with the national and/or international standards recognized by the Register. The non-destruetive testing procedures developed and/or applied by the manufacturer shall be approved by the Register and contain information on the following:

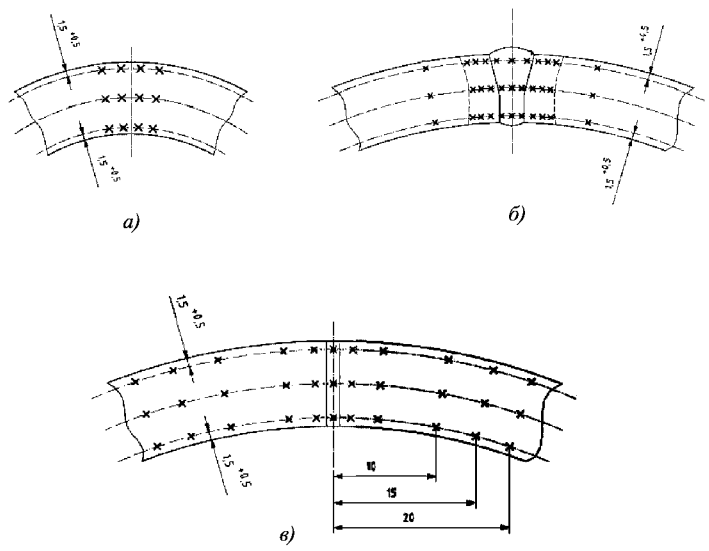

Fig. 4.3.5.4
Positions of hardness measurement points:
a – seamless element; *b* – arc welding; *c* – high-frequency current welding

method of non-destructive testing and standards applied;

equipment applied (main and auxiliary);

sensitivity;

artificial defect parameters and calibration methods;

equipment setting procedures;

evaluation of defects;

drawing-up of reports and recording of test results.

4.3.8.1.2 The laboratories conducting non-destructive testing shall have a Recognition Certificate issued by the Register (Recognition Certificate for Manufacturer (СПИ) or Recognition Certificate of Testing Laboratory, refer to 1.7 and 1.10 of the SP Guidelines) and/or the corresponding document of an authorized national or international organization confirming competence of the laboratory.

4.3.8.1.3 The personnel performing non-destructive testing and estimating the test values shall be certified in accordance with ISO 9712 or other standards recognized by the Register.

4.3.8.1.4 General requirements to non-destructive testing of welded joints of pipes shall comply with the requirements of 5.4.1.

4.3.8.1.5 It is recommended to generalize information on detected permissible defects at all the stages of rolled steel/pipes and bend/fitting manufacture and pipeline construction (installation) for the following:

steel plate sample (skelp);

seamless pipes;

welded pipes manufactured of rolled plates, including defects of longitudinal/spiral weld;

mother pipes for bends/fittings;

butt girth welds during laying (installation) of pipeline.

The acceptable defects detected at the above mentioned stages may be taken into consideration when preparing the database of defects for determining the initial technical condition of the pipeline (after completion of construction) and their check while in service.

The acceptable defect values assigned during manufacture of steel rolled products and pipes, and their arrangement in the wall of a pipe/rolled product shall not exceed the acceptable defects determined for the initial stage of operation of subsea pipeline, for example, when conducting in-line inspection after completion of pipeline construction.

4.3.8.2 Rolled plates.

4.3.8.2.1 During production of steel rolled plates (samples for welded pipes), each plate is subject to non-destructive testing to detect delaminations (check of rolled products for continuity). As a rule, automated ultrasonic testing equipment is used for this purpose.

4.3.8.2.2 The requirements to continuity of steel rolled products and quality of its surface, including the edges, shall comply with Table 4.5.5.3-1, unless otherwise specified in the documentation approved by the Register. The width of checked longitudinal near-edge zones of rolled plate and coiled products shall be not less than 50 mm; the width of checked transverse near-edge zones of rolled flat products shall be not less than 200 mm.

4.3.8.3 Seamless pipes.

4.3.8.3.1 During check (qualification) testing and manufactute, each seamless steel pipe shall be subject to non-destructive testing to detect the following:

.1 longitudinal and transverse defects in the pipe body with the use, as a rule, of automated ultrasonic testing equipment;

.2 delaminations in the pipe body using, as a rule, the automated ultrasonic testing equipment;

.3 surface defects in the pipe near-edge zone;

.4 delaminations of pipe ends in near-edge zone and on the end faces/bevels of pipes.

4.3.8.3.2 Additionally to the requirements specified in 4.3.8.3.1, the surface defects of the pipe body shall be detected:

.1 during check testing for recognition of the manufacturer or qualification batch, for each pipe;

.2 during production and based on satisfactory results of check (qualification) testing, for one pipe of a batch.

4.3.8.3.3 The criteria for acceptance of ultrasonic testing for longitudinal and transverse defects in the pipe body, unless otherwise specified in the documentation approved by the Register, shall comply with ISO 10893-10, acceptance level U2/C.

4.3.8.3.4 The criteria for acceptance of ultrasonic testing when detecting delaminations in the pipe body and near-edge zones shall comply with Table 4.5.5.3-1, unless otherwise specified in the documentation approved by the Register.

See Circular 1216

4.3.8.3.5 The ends of seamless pipes in the near-edge zone not covered by automated ultrasonic testing shall be checked by manual ultrasonic testing equipment to detect delaminations and surface defects, as well as delaminations on end faces/bevels of pipes.

4.3.8.3.6 When checking by surface method used by the manufacturer and approved by the Register (magnetic particle testing or dye penetrant testing), the end faces/bevels of pipes shall be free of delaminations.

4.3.8.3.7 Testing of pipe body and/or near-edge zone for surface defects.

4.3.8.3.7.1 Testing of pipe body for surface defects during check (qualification) testing shall be carried out in accordance with the procedures approved by the Register and developed on the basis of the international and/or national standards. When using magnetic particle testing, the acceptance criteria for the pipe body, unless otherwise specified in the documentation approved by the Register, shall comply with ISO 10893-5, acceptance level M1.

4.3.8.3.7.2 During manufacture, the end sections of pipes in the near-edge zone not covered by automated

ultrasonic testing for longitudinal and transverse defects shall be checked by the surface method in compliance with **4.3.8**.3.7.**1** on outer and inner surfaces of pipe ends. When using magnetic particle testing, no single defects exceeding 6 mm in size is allowed.

4.3.8.4 Welded pipes.

4.3.8.4.1 General.

4.3.8.4.1.1 Welded pipes shall be made of rolled products meeting the check requirements of **4.3.8.2**.

4.3.8.4.1.2 During check (qualification) testing and production, non-destructive testing of longitudinal welded pipes, unless otherwise specified in the documentations approved by the Register, shall be carried out in two stages:

.1 non-destructive testing of welded joints (prior to hydraulic tests);

.2 final non-destructive testing of welded joints and base metal (after hydraulic tests).

4.3.8.4.2 Non-destructive testing of welded pipes.

4.3.8.4.2.1 Non-destructive testing of welded pipes at the first stage (prior to hydraulic tests) is carried out:

.1 to detect longitudinal and transverse defects of welds using, as a rule, automated ultrasonic testing equipment;

.2 to detect longitudinal and transverse defects of end sections of welds not covered by automated ultrasonic testing, by manual ultrasonic testing;

.3 to recheck the areas marked in the course of automated ultrasonic testing, by manual ultrasonic or radiographic testing;

.4 to detect defects of weld areas repaired by elimination of defects followed with welding, by radiographic testing.

4.3.8.4.2.2 At the second stage, the acceptance non-destructive testing of base metal of pipe ends and welds is carried out after hydraulic tests of pipes, using:

.1 non-destructive testing equipment specified in **4.3.8.4.2.1** (except for **4.3.8.4.2.1.4**);

.2 radiographic testing of end sections of welds at a length of at least 200 mm from the pipe end face;

.3 ultrasonic testing of pipe base metal in near-edge zone of at least 50 mm in case of delaminations;

.4 magnetic particle or dye penetrant testing of pipe end faces/bevels.

4.3.8.4.2.3 Additionally to the requirements specified in **4.3.8.4.2.2**, the surface defects on pipe weld shall be detected:

during check testing for recognition of the manufacturer or qualification batch, for each pipe;

during manufacture and based on satisfactory results of check (qualification) testing, for one pipe of a batch.

4.3.8.4.2.4 The criteria of weld quality assessment during manufacture of welded pipes shall comply with the following:

for visual examination/measuring and magnetic particle testing, refer to Table 5.**4**.3.3;

for radiographic testing, refer to Table 5.**4**.3.6-**1**;

for ultrasonic testing, refer to Table 5.**4**.3.6-**2**.

4.3.8.4.2.5 The criteria for acceptance of ultrasonic testing when detecting delaminations in near-edge zones shall comply with Table **4**.5.5.3-**1**, unless otherwise specified in the documentation approved by the Register. The end faces/bevels of pipes are not allowed to have delaminations.

4.3.9 Special tests.

4.3.9.1 Table **4**.3.**9**.**1** contains the requirements for the nomenclature of base metal special tests based on the pipeline reliability level (refer to **4**.**1**.3). Steel may be accepted for the pipeline manufacture only after performance of special tests specified in Table **4**.3.**9**.**1**. Upon the RS request, the scope of special tests at the initial survey of manufacture may be increased for any reliability level of any class pipelines.

The minimum required scope of special tests shall be determined upon agreement with the Register considering the stability of properties of metal to be supplied and the pipeline class.

4.3.9.2 Drop-weight tear testing (DWTT).

The sample (billet) used for manufacture of pipe specimens shall be cut out transverse to the longitudinal axis of the pipe, as regards the plate specimens - normal to the direction of rolling.

As a rule, tests shall be carried out on the metal of the rolled product and pipes during the initial survey of the manufacture (except the products for **L — L2** pipelines steel strength categories less PCT36 and pipes with the diameter less than 500 mm).

Table 4.3.9.1

See Circular 1216

Nomenclature of special tests for subsea pipelines

Type of media to be conveyed	Performance reliability level			
	Basic	Advanced	For corrosive media conveying	For seismically active regions and ice-resistant standpipes
Liquids and two-phase flows (L)	Not required	CTOD	Corrosion tests, CTOD	DWTT, NDT, CTOD, T_{kb}
Gases (G)	DWTT	DWTT, NDT, CTOD, T_{kb}	Corrosion tests, DWTT, NDT, CTOD, T_{kb}	DWTT, NDT, CTOD, T_{kb}

Notes: 1. Corrosion tests include the tests specified in 4.3.9.5.
2. The DWTT requirements are mandatory only for steel grade PCT36 and above, for pipes with diameter of 500 mm and above.

For rolled product and pipes of **L3** and **G — G3** pipelines this type of tests is carried out during the approval of product batches in order to determine the bend type at the minimum operating temperature T_p.

The procedure and scope of testing, specimen cut out flow charts are specified in para 1 of Appendix **4**.

4.3.9.3 Determination of metal crack resistance properties CTOD (crack tip opening displacement).

The samples shall be taken from 1/4 ± 1/8 of the plate width and from a position located at an angle of 90° to the pipe weld seam.

At the RS discretion, the number of pipes, plates taken from the cast to be tested and their thickness, as well as the test temperatures may be changed proceeding from the intended use of steel or conditions of the order.

Definitions, general requirements to sampling and specimen manufacture, equipment are set forth in Section 2, Part XII "Materials" of the Rules for the Classification, Construction and Equipment of MODU/ FOP.

The CTOD testing procedure is specified in Section 2 of Appendix **4**.

As a rule, the tests are carried out on the metal of the rolled product and pipes during the initial survey of **L1 — L3** and **G1 — G3** pipelines manufacture.

4.3.9.4 Bending tests.

As a rule, the tests are carried out on the pipe metal during the initial survey of the pipe manufacture. The tests may be also required during the initial survey of the rolled product manufacture.

The testing procedure is specified in Section **3** of Appendix **4**.

Particulars of bending tests of weld specimens of bend/fittings are specified in **4**.8.7.1.

4.3.9.5 Corrosion tests.

The tests shall be carried out where the relevant additional requirements of the customer's order documentation are available. As a rule, the tests shall be performed during the initial survey of the rolled product and pipes for **L2** and **G2** pipelines manufacture.

Unless otherwise specified, three specimens from each batch of pipes shall be tested.

4.3.9.5.1 Sulphide stress cracking resistance.

The test procedure is specified in Section **4** of Appendix **4**.

Particulars of testing sulphide stress cracking resistance of bends/fittings are specified in **4**.8.7.2.

Upon agreement with the Register, alternative testing methods may be used, including tests under hydrogen sulphide partial pressure corresponding to anticipated operating conditions.

4.3.9.5.2 Determination of hydrogen-induced cracking, stepwise cracking resistance.

The test procedure is specified in Section 5 of Appendix **4**.

Particulars of testing hydrogen-induced cracking/ stepwise cracking resistance of bends/fittings are specified in **4**.8.7.**3**.

Upon agreement with the Register, the tests in other medium under hydrogen sulphide partial pressure corresponding to anticipated operating conditions are allowed.

4.3.9.6 Tests for determination of ductile-brittle transition temperature T_{kb}. The samples shall be taken from 1/4 of the plate width having a least 14 mm of thickness. The Register may require to conduct tests during the initial survey of manufacture of rolled product for **L3** and **G1 — G3** pipelines to verify the sufficient brittle fracture resistance of material.

The definitions, general requirements to test procedure, specimen manufacture and equipment are specified in Section 2, Part XII "Materials" of the Rules for the Classification, Construction and Equipment of MODU/ FOP.

4.3.9.7 Tests for determination of nil-ductility temperature NDT.

The samples shall be cut out from 1/4± 1/8 of the plate width having at least 16 mm thickness and from a position located at the angle of 90° to the pipe weld seam for the pipes of 530 mm in diameter and above and the wall thickness at least 20 mm. The Register may require to conduct tests during the initial survey of the manufacture of rolled product and pipes for **L3** and **G1 — G3** pipelines.

The definitions, general requirements to test procedure, specimen manufacture and equipment are specified in Section 2, Part XII "Materials" of the Rules for the Classification, Construction and Equipment of MODU/FOP.

4.3.10 Remanent magnetization testing.

4.3.10.1 For steel pipes subject to non-destructive testing by magnetic particle or eddy current methods, the remanent magnetization testing shall be carried out.

4.3.10.2 The measurements shall be taken on at least one pipe of a batch, on both ends along two perpendicular axes. The mean value of four measurements shall not exceed 2 mT (20 Gs).

4.4 STEEL MATERIALS SELECTION

4.4.1 Generally, steel materials shall be selected in compliance with the requirements of Sections **3**, as well as considering the requirements of **4**.1 and **4**.5.

4.4.2 Properties of steel used for subsea pipelines shall comply with the pipeline specific application and operating conditions. Steel shall ensure structural and technological strength of pipelines conveying hydrocarbons at prescribed minimum operating temperature and operational loads.

4.4.3 Selection of steel and welding consumables for the pipeline shall be carried out depending on the minimum operating temperature of the pipeline or its section T_p. Unless otherwise specified, minimum temperature for the subsea pipelines shall be

equal to −10 °C, except for the sections located within the zone of complete freezing or the splash zone.

4.4.4 Clad steel for subsea shall be assigned considering the requirements of 3.17, Part XIII "Materials" of the Rules for the Classification and Construction of Sea-Going Ships.

4.5 STEEL FOR SUBSEA PIPELINES

4.5.1 General.

4.5.1.1 The requirements of this Section cover the weldable steel plates and pipe steel intended for subsea pipelines subject to technical supervision during manufacture.

4.5.1.2 The following designations (identification marks) for grade of steel have been introduced:

.1 steel for the subsea pipelines shall have index PCT before identification mark for steel grade;

.2 the marking may be ended with the designation *W* — steel for the welded pipes.

The strength level shall be determined proceeding from the required minimum yield stress value:

for normal strength steel — 235 MPa (strength level is omitted in the identification mark);

for higher strength steels — 315 MPa, 355 MPa, 390 MPa (numerical designations 32, 36 and 40 specified in the identification mark, respectively);

for high-strength steels — 420 MPa, 460 MPa, 500 MPa, 550 MPa, 620 MPa, 690 MPa (numerical designations 420, 460, 500, 550, 620, 690 are stated in the identification mark, respectively).

4.5.1.3 It is allowed, on special consideration by the Register, to supply steel pipes in compliance with the requirements of national and international standards. In this case, special consideration means, except for comparison of reference data, the possibility to conduct additional tests, which may confirm compliance of steel with the above grades and its use for the intended purpose.

Table 4.5.1.3 based on comparison of strength characteristics contains the relevant analogs of domestic and foreign steel grades.

4.5.2 Chemical composition.

4.5.2.1 The chemical composition of steel and values of C_{eq} and P_{cm} shall meet the requirements of Table 4.5.2.1-1 — for the pipe plate and welded pipes; and Table 4.5.2.1-2 for seamless pipes.

The chemical composition may comply with the requirements of national and international standards recognized by the Register. In any case, the chemical composition of steel shall be agreed with the Register during the initial recognition of manufacture of particular products.

4.5.2.2 The chemical composition of rolled products and pipes (welded and seamless) shall be controlled during manufacture.

4.5.2.3 Determination of C_{eq} is a mandatory requirement for the delivery of all steel grades up to the strength level equal to 500 MPa, including steels subjected to TMCP.

Determination of P_{cm} is a mandatory requirement for the supply of all steel grades with the strength level equal to 460 MPa and more. In other cases, values of C_{eq} and P_{cm} are shown in certificates upon the customer's request.

Carbon equivalent shall be determined by the formulae:

$$C_{eq} = C + Mn/6 + (Cr + Mo + V)/5 + (Ni + Cu)/15, \%; \quad (4.5.2.3)$$

$$P_{cm} = C + (Mn + Cr + Cu)/20 + Mo/15 + Ni/60 + Si/30 + V/10 + 5B, \%.$$

4.5.3 Mechanical properties.

4.5.3.1 The mechanical properties of steel shall meet the requirements of Table 4.5.3.1.

For rolled products, allowance for plastic strain shall be considered in the course of pipe manufacture. Unless otherwise specified, for a skelp the maximum permissible yield stress to tensile strength ratio shall be less than that for the pipe metal at least by 0,02. See Circular 1216

4.5.4 Condition of supply.

4.5.4.1 The recommended conditions of supply are specified in Table 4.5.4.1.

Table 4.5.1.3

Correspondence of steel grades to be supplied under national and international standards

Steel grade for subsea pipelines according to SP Rules	National pipe steel strength grade	Foreign pipe steel strength grade
PCT, PCTW	K38, K42	B
PCT32, PCT32W	K50	X46
PCT36, PCT36W	K52, K54	X52
PCT40, PCT40W	K55	X60
PCT420, PCT420W	K56	X65
PCT460, PCT460W	K60	X70
PCT500, PCT500W	K60, K65	X70
PCT550, PCT550W	K65	X80
PCT620, PCT620W	K70	X90
PCT690, PCT690W	K80	X100

Table 4.5.2.1-1

Chemical composition of rolled products and base metal used for the subsea pipeline welded pipes

Grade	Content of elements, % by mass, not more									
	PCTW	PCT32W	PCT36W	PCT40W	PCT420W	PCT460W	PCT500W	PCT550W	PCT620W	PCT690W
C	0,12	0,12	0,12	0,12	0,12	0,12	0,12	0,14	0,14	0,14
Mn	1,35	1,65	1,65	1,65	1,65	1,65	1,75	1,85	1,85	1,85
Si	0,40	0,40	0,45	0,45	0,45	0,45	0,45	0,45	0,50	0,55
P	0,020	0,020	0,020	0,020	0,020	0,020	0,020	0,020	0,020	0,020
S	0,010	0,010	0,010	0,010	0,010	0,010	0,010	0,010	0,010	0,010
Cu	0,35	0,35	0,50	0,50	0,50	0,50	0,50	0,50	0,60	0,60
Ni	0,30	0,80	0,80	0,80	0,80	0,80	1,20	1,20	1,80	2,00
Mo	0,10	0,10	0,50	0,50	0,50	0,50	0,50	0,50	0,50	0,50
Cr	0,30	0,30	0,50	0,50	0,50	0,50	0,50	0,50	0,70	0,70
Al (total)	0,06	0,06	0,06	0,06	0,06	0,06	0,06	0,06	0,06	0,06
Nb	—	0,04	0,05	0,06	0,06	0,06	0,06	0,06	0,06	0,06
V	—	0,04	0,05	0,07	0,08	0,10	0,10	0,10	0,10	0,10
Ti	—	0,04	0,04	0,05	0,06	0,06	0,06	0,06	0,06	0,06
N	0,010	0,010	0,010	0,010	0,010	0,010	0,010	0,010	0,010	0,010
B	0,0005	0,0005	0,0005	0,0005	0,0005	0,0005	0,0005	0,0005	0,0005	0,0005
C_{eq}	0,36	0,34	0,37	0,38	0,38	0,39	0,41	0,44	—	—
P_{cm}	0,19	0,19	0,20	0,21	0,21	0,22	0,23	0,25	0,27	0,30

Notes: 1. For wall thickness t_c exceeding 35 mm and for steel grades with strength higher than PCT550 the alteration of chemical composition is permitted subject to agreement with the Register.

2. Where scrap material has been used in steel production, the maximum content of the following elements shall be controlled: 0,03 % As, 0,01 % Sb, 0,02 % Sn, 0,01 % Pb, 0,01 % Bi and 0,006 % Ca.

3. For each reduction of 0,01 % carbon below the maximum specified value, an increase of 0,05 % manganese content above the maximum specified values is permitted with a maximum increase of 0,1 %.

4. Alloying of 0,5 — 1,0 % Cr is permitted subject to agreement with the Register.

5. For steel grades with strength higher than PCT550 alloying up to 2,2 % of Ni is permitted.

6. Al:N ⩾ 2:1 (not applicable for titanium killed steel).

7. (Nb + V + Ti) shall not to exceed 0,12 %.

8. The Nb content may be increased to 0,10 % subject to agreement with the Register.

9. The B content may be increased to 0,003 % subject to agreement with the Register.

10. For L2 and G2 pipelines C ⩽ 0,10 %, P ⩽ 0,015 %, S ⩽ 0,003 %.

Table 4.5.2.1-2

Chemical composition of seamless pipes of the subsea pipelines

Grade		Content of elements, % by mass, not more									
		PCT	PCT32	PCT36	PCT40	PCT420	PCT460	PCT500	PCT550	PCT620	PCT690
C		0,14	0,14	0,14	0,14	0,14	0,15	0,16	0,16	0,16	0,16
Mn		1,35	1,65	1,65	1,65	1,65	1,65	1,75	1,85	1,85	1,85
Si		0,40	0,40	0,45	0,45	0,45	0,45	0,45	0,45	0,50	0,55
P		0,020	0,020	0,020	0,020	0,020	0,020	0,020	0,020	0,020	0,020
S		0,010	0,010	0,010	0,010	0,010	0,010	0,010	0,010	0,010	0,010
Cu		0,35	0,35	0,50	0,50	0,50	0,50	0,50	0,50	0,60	0,60
Ni		0,30	0,80	0,80	0,80	0,80	0,80	1,20	1,20	1,80	2,00
Mo		0,10	0,10	0,50	0,50	0,50	0,50	0,50	0,50	0,50	0,50
Cr		0,30	0,30	0,50	0,50	0,50	0,50	0,50	0,50	0,70	0,70
Al (total)		0,06	0,06	0,06	0,06	0,06	0,06	0,06	0,06	0,06	0,06
Nb		—	0,04	0,05	0,05	0,05	0,05	0,05	0,06	0,06	0,06
V		—	0,04	0,07	0,08	0,08	0,09	0,10	0,10	0,10	0,10
Ti		—	0,04	0,04	0,04	0,04	0,06	0,06	0,06	0,06	0,06
N		0,010	0,010	0,010	0,010	0,010	0,010	0,010	0,010	0,010	0,010
B		0,0005	0,0005	0,0005	0,0005	0,0005	0,0005	0,0005	0,0005	0,0005	0,0005
C_{eq}	$t_c \leqslant 15$	0,34	0,34	0,37	0,38	0,39	0,40	0,41	0,43	—	—
	$15 < t_c < 26$	0,35	0,35	0,38	0,39	0,40	0,41	0,42	0,44	—	—
P_{cm}	$t_c \leqslant 15$	0,20	0,20	0,21	0,22	0,22	0,23	0,24	0,26	0,29	0,32
	$15 < t_c < 26$	0,21	0,21	0,22	0,23	0,23	0,24	0,25	0,27	0,30	0,33

Notes: 1. For wall thickness t_c exceeding 26 mm and for steel grades with strength higher than PCT550 the alteration of chemical composition is permitted subject to agreement with the Register.

2 — 10. Refer to Table 4.5.2.1-1.

Table 4.5.3.1

Mechanical properties of pipe metal

Grade	PCT PCTW	PCT32 PCT32W	PCT36 PCT36W	PCT40 PCT40W	PCT420 PCT420W	PCT460 PCT460W	PCT500 PCT500W	PCT550 PCT550W	PCT620 PCT620W	PCT690 PCT690W
Yield stres R_{eH} or $R_{p0,2}$, in MPa, min	235	315	355	390	420	460	500	550	620	690
Tensile strength R_m, in MPa	400 — 520	440 — 570	490 — 630	510 — 660	530 — 680	570 — 720	610 — 770	670 — 830	720 — 890	770 — 940
Yield stress to tensile strength ratio, max	0,90	0,90	0,90	0,90	0,92	0,92	0,92	0,92	0,93	0,93
Elongation A_5, %, min	22	22	21	20	19	18	18	18	15	14
Bending angle, °, min	120									
Impact energy *KV*, in J, in the transverse direction, at T_p –10 °C for pipes having $t_c \leq 20$ mm and at T_p –20 °C for pipes having $t_c > 20$ mm, min										
L — L2, G pipelines, base metal and weld joint metal during the manufacture of pipelines of all classes										
For all D_a	29	31	36	39	42	46	50	55	62	69
G1 — G3 and L3 pipeline class, base metal										
$D_a \leqslant 610$ mm	40	40	50	57	64	73	82	103	Subject to agreement with the Register	
$610 < D_a \leqslant 820$ mm	40	43	61	69	77	89	100	126	Subject to agreement with the Register	
$820 < D_a \leqslant 1120$ mm	40	52	75	85	95	109	124	155	Subject to agreement with the Register	
Type of DWTT* fracture, L3 and G — G3 pipeline: 85 % average fiber, 75 % minimum at T_p										
Critical brittle temperature NDT, T_{kb}										
L3 pipeline	$t_c \leqslant 20$ мм	NDT $\leqslant T_p - 20$ °C								
	$20 < t_c \leqslant 30$ мм	NDT $\leqslant T_p - 30$ °C								
	$30 < t_c \leqslant 40$ мм	NDT $\leqslant T_p - 40$ °C, $T_{kb} \leqslant T_P - 10$ °C								
G1 — G3 pipeline	$t_c \leqslant 20$ мм	NDT $\leqslant T_p - 30$ °C								
	$20 < t_c \leqslant 30$ мм	NDT $\leqslant T_p - 40$ °C								
	$30 < t_c \leqslant 40$ мм	NDT $\leqslant T_p - 50$ °C, $T_{kb} \leqslant T_P - 20$ °C								
CTOD, mm, at *Tp*, L1 — L3, G1 — G3 pipeline, min										
$t_c \leqslant 20$ mm	0,10	0,10	0,10	0,10	0,10	0,10	0,15	0,15	0,15	0,20
$20 < t_c \leqslant 30$ mm	0,10	0,10	0,15	0,15	0,15	0,20	0,20	0,20	0,25	0,25
$30 < t_c \leqslant 40$ mm	0,15	0,15	0,20	0,20	0,20	0,25	0,25	0,30	0,35	0,35
Sulphide stress cracking resistance, L2 and G2 pipelines: no cracks within 720 h under pressure 85 % of the minimum rated yield stress										
Hydrogen-induced cracking/stepwise cracking resistance, L2 and G2 pipelines: CLR $\leqslant$ 15 %, CTR $\leqslant$ 5 %, CSR $\leqslant$ 2 %										

Table 4.5.3.1 — continued

Notes: 1. The required average values of impact energy are obtained at testing three specimens specified at the temperature according to 4.3.3.6. Reduction of impact energy up to 70 % of the required value is permitted on one specimen.

2. The required impact energy values in the longitudinal direction exceed 1,5 times impact energy values obtained in the transverse direction.

3. For D_a and t_c dimensions beyond the specified limits the requirements shall be subject to agreement with the Register.

4. * for steel grade PCT36 and above only.

5. For **L1** – **L3**, **G1** – **G3** pipelines the yield stress values obtained during the tests in the transverse direction shall not exceed the prescribed values for more than 130 MPa.

6. Ultimate strength value obtained during the testing specimens cut in the longitudinal direction may be 5% lower than the values specified in the Table.

7. Yield stress to ultimate strength ratio obtained for the specimens cut in longitudinal direction shall not exceed the value set in the table for more than 0,02.

8. Determination of impact energy *KV* and CTOD value for the weld joint metal is conducted according to the requirements of Section 5.

Table 4.5.4.1

Condition of supply of rolled products and pipes

Steel grade	Minimum temperature of impact bending test, at least, °C	Condition of supply at the thickness of	
		t_c < 12,5 mm	12,5 ⩽ t_c ⩽ 40 mm
PCT, PCTW	−10	any	N, CR, TMCP
	−40	any	N, CR, TMCP, Q + T
	−60	CR	TMCP, Q + T
PCT32, PCT32W	−20	any	N, CR, TMCP, Q + T
	−40	any	N, TMCP, Q + T
	−60	CR	TMCP, Q + T
PCT36, PCT36W	−20	any	N, CR, TMCP, Q + T
	−40	CR	CR, N, TMCP, Q + T
	−60	CR	CR, TMCP, Q + T, Q* + T
PCT40, PCT40W	−20	any	CR, TMCP, Q + T
	−40	CR	CR, TMCP, Q + T
	−60	CR, TMCP, Q + T, Q* + T	
PCT420, PCT420W	At any temperatures of bending impact tests	CR, TMCP, Q + T, Q* + T	
PCT460, PCT460W		CR, TMCP, Q + T, Q* + T	
PCT500, PCT500W		CR, TMCP, Q + T, Q* + T	
More strong		TMCP, Q + T	

4.5.4.2 There are following heat treatment procedures: normalizing (N), controlled rolling (CR), thermomechanical controlled processing (TMCP), quenching and tempering (Q + T) quenching from rolling heat and tempering (Q* + T).

4.5.4.3 The welded pipes are manufactured using bending and welding procedures. As a rule, the pipes undergo cold expansion to achieve the required dimensions. Plastic deformation of the pipe metal during the cold expansion shall not exceed 1,5 %. Seamless pipes are manufactured using the method of cold and hot rolling procedures.

4.5.5 Examination.

4.5.5.1 The requirements for rolled product surface quality, repair and removal of surface defects shall comply with 3.2.7, Part XIII "Materials" of the Rules for

the Classification and Construction of Sea-Going Ships (repair by welding is not allowed). Tolerances on rolled product thickness shall meet the standards recognized by the Register and be subject to agreement with the customer.

4.5.5.2 Non-destructive testing shall be carried out in compliance with the requirements of 4.3.8. The steel shall be free from any defects prejudicial to its use for the intended application. The manufacturer shall guarantee the absence of surface defects and internal discontinuities which dimensions prevent performance of non-destructive testing of welded joints.

4.5.5.3 Examination and verification of dimensions, geometry and mass of rolled products and pipes shall be carried out by the manufacturer. The availability of the Register certificate does not relieve the manufacturer of the responsibility if a material or product is subsequently found defective or does not comply with the agreed technical documentation or standards as regards its dimensions, geometry and mass.

The recommended requirements for dimension deviations and quality of rolled products and pipes are specified in Tables 4.5.5.3-1 and 4.5.5.3-**2**, respectively.

Table 4.5.5.3-1

General requirements for rolled products

Characteristics	Scope of examination	Value
Deviations from flatness equal to 1 linear metre	100 %	Not more than 6 mm
Camber equal to 1 linear metre	100 %	Not more than 1 mm
Rolled product continuity	100 %	No delaminations exceeding the following values are allowed: for L2 and G2 pipeline classes: area of 500 mm^2, at that the delaminations with the area of 150 mm^2 or more (from 8 mm in width and 15 mm in length) are recorded if they are not more than 5 per 0,25 m^2; for other pipeline classes: area of 1000 mm^2, at that the delaminations with the area of 300 mm^2 or more (from 8 mm in width and 35 mm in length) are recorded if they are not more than 10 per 1,0 m^2; upon agreement, for all pipeline classes: area of 100 mm^2, at that the delaminations with the area of 30 mm^2 or more (from 5 mm in width and in length) are recorded if they are not more than 5 per 0,25 m^2; in near-edge zone of at least 50 mm wide: area of 100 mm^2 and width of 6 mm and more, at that the delaminations of 10 mm in length and more are recorded if they are not more than 3 per 1,0 of edge length.
Surface quality	100 %	Cracks, skins, blisters,laps are not permitted. Separate roll marks, hairlines and rippling are permitted
Thickness of rolled product[1] at $7{,}5 < t_c < 40$, mm	100 %	$-0{,}4/ + (0{,}016t_c + 1{,}2)$, mm
Width of rolled product	100 %	$-20/0$, mm

[1]Other thicknesses shall be subject to agreement with the Register

Table 4.5.5.3-2

General requirements for the pipe dimensions

Characteristics	Scope of examination	Welded pipe	Seamless pipe[1]
Diameter pipe ends D_a < 610 mm	100 %	±0,5 mm or ±0,5 % D_a, (whichever is greater), but max. ±1,6 mm	
Diameter pipe ends D_a > 610 mm	100 %	±1,6 mm	±2,0 mm
Greatest difference in end diameters of one pipe (each pipe measured)	100 %	12,5 % t_c	
Diameter pipe body, $D_a \leqslant 610$ mm	100 %	±0,5 mm or ±0,75 % D_a, (whichever is greater), but max. ±3,0 mm	±0,5 mm or ±0,75 % D_a (whichever is greater)
Diameter pipe body, D_a > 610 mm	100 %	±0,5 % D_a, but max ±4,0 mm	±1 % D_a
Out-of-roundness, pipe ends[2,3], $D_a/t_c \leqslant 75$	R[4]	1,0 % but max. 8 mm	
Out-of-roundness, pipe ends[2], D_a/t_c > 75	R[4]	1,5 % but max. 8 mm	

Table 4.5.5.3-2 — continued

Characteristics	Scope of examination	Welded pipe	Seamless pipe[1]
Out-of-roundness, pipe body[2]	$R^{4,5}$	2,0 % but max. 15 mm	
Местные отклонения от круговой формы	R^4	< 0,5 % D_a, but not more than 2,5 mm	—
Wall thickness $t_c \leqslant 15$ mm	100 %	±0,75 mm	±12,5 % t_c
Wall thickness, $15 < t_c \leqslant 20$ mm	100 %	± 1,0 mm	±12,5 % t_c
Wall thickness, $t_c > 20$ mm	100 %	+ 1,5 / − 1,0 mm	±10 % t_c , but max. ±1,6 mm
Total curvature	R^4	⩽0,2 % L^6	
Local curvature	R^4	⩽1,5 mm for 1 m of L	
Ends squareness	R^4	⩽1,6 mm from true 90°	
Radial offset from the weld (LBW: — laser-beam welding and HFW: — high frequency welding)	R^4	[7]	—
Radial offset from the weld (SWA — submerged arc welding)	R^4	< 0,1 t_c, but max. 2,0 mm	—
Pipe length	100 %	Upon the customer's request	
Pipe weight	100 %	−3,5 % / + 10 % of nominal weight	

[1]The requirements for continuity and surface quality of seamless pipes are similar to those for a skelp (refer to Table 4.5.5.3-1).
[2]Out-of-roundness is determined by Formula (3.3.5-5) or as an absolute value.
[3]Upon agreement, out-of-roundness may be limited to 0,6 % but max. 5 mm.
[4]R means random testing of 5 % of the pipes, but minimum 3 pipes per shift.
[5]Dimensions pipe body shall be measured approximately in the middle of the pipe length.
[6]L — the pipe length.
[7]Thickness considering offset from the weld shall be within the limits of pipe wall thickness tolerance; in this case not less than actual minimum wall thickness of each pipe.

4.6 MATERIALS OF FLEXIBLE POLYMER-METAL PIPES AND THEIR END FITTINGS

4.6.1 General.

4.6.1.1 Selection of materials shall be carried out at the design stage of the flexible subsea pipeline structure to ensure its integrity, strength, reliability and durability, considering the potential changes of operational conditions and material properties during the design pipeline service life.

The possible changes of the flexible pipe shape and material properties during the whole sequence of operations associated with the pipeline storage, transportation and laying with use of reels (bundles) shall be also taken into account.

4.6.1.2 Properties of the flexible pipe layer materials for polymeric-metal pipes shall correspond to their purpose and the operating conditions of the pipeline.

All the armoring layers (carcass, radial armoring layer, axial armoring layer) shall be made of steel profiled strips (including an interlocked metallic construction) or wire. These layers shall ensure structural and technological strength of pipelines conveying hydrocarbons at prescribed minimum operating temperature and operational loads.

Inner (internal sheath, outer sheath, liner), separating (intermediate sheath) and insulation layers shall be made of polymer materials.

End fittings shall be manufactured from the steels complying with the requirements of **4.4**.

4.6.1.3 All the materials used in the flexible pipe construction shall be certified for application in the corresponding environment (seawater) and the transported (natural gas, oil, etc.) medium within the range of design operating temperatures.

4.6.1.4 Service life of the flexible pipeline shall be specified taking into account the allowance for degradation of the mechanical properties of the material during the pipeline long-term service.

4.6.2 Polymer materials.

4.6.2.1 Nomenclature of the RS-controlled properties of polymer materials used during manufacture of the inner and intermediate layers of the flexible pipe is specified upon the design and purpose of the flexible pipes, proceeding from the following range of parameters:

.1 mechanical properties:
tensile strength;
ultimate elongation;
compressive strength;
shear strength;
bending strength;
modulus of elasticity;
impact strength;
hardness;
abrasion resistance;
residual compressive strain;
.2 physical properties:
density;
coefficient of thermal expansion;
melting point; softening point;
range of working temperatures;
water absorption;
gas-/watertightness;
.3 other properties:
coefficient of thermal conductivity;
ageing;
creeping;
chemical resistance to the environment and the transported medium;
resistance to rapid depressurization;
endurance;
acceptable defects (notch sensitivity).

4.6.2.2 When the internal sheath of the flexible pipe is composed of multiple layers, the manufacturer shall experimentally confirm that the dissimilar material complies with the design requirements for the specified operating conditions and service life.

4.6.2.3 For polymer materials composing the insulation layers of the flexible pipes, the following shall be determined:
tensile strength;
ultimate elongation;
compression strength;
modulus of elasticity;
density;
coefficient of thermal conductivity (in dry and flooded conditions);
melting point;
softening point;
range of working temperatures;
water absorption;
endurance.

4.6.2.4 For sheath materials, the following shall be determined:
integrity properties;
melting point;
range of working temperatures;
endurance.

4.6.2.5 The effect of hydrostatic compression, water absorption and creeping shall be determined for buoyancy components.

4.6.3 Metal materials.

4.6.3.1 Nomenclature of the controlled properties of metal materials used in manufacture of the composite flexible pipes and end fittings includes the following:
.1 mechanical properties:
chemical composition;
metal macro- and microstructure;
tensile strength;
yield stress;
elongation;
charpy impact strength for end fittings having a wall thickness over **6** mm at the minimum operating temperature below 0 °C (refer to **4.3.3.3**);
hardness of base metal and welded joint metal;
results of a collapse test and drift test for all-metal pipes;
modulus of elasticity and Poisson's ratio;
data on corrosion resistance to transported medium and the environment (sea-water);
data on erosion resistance to transported medium;
stress-cycle diagram during loading in air and corrosive media, which simulate the transported medium and seawater;
coefficient of thermal expansion;
.2 other properties:
chemical composition;
corrosion resistance;
erosion resistance;
cyclic fatigue/fatigue endurance;
resistance to hydrogen cracking and sulphide corrosion cracking.

4.7 STEEL FLANGES

4.7.1 Terms and definitions.

The requirements of this Chapter apply to the following steel products used in subsea pipelines:

flange connection means a pair of matching flanges with sealing gaskets, bolts or studs with nuts and washers used for installation of a pipeline section (string/spool piece) or subsea valves without welding and with possibility of dismantling and replacing a part of pipeline or a fitting;

contact (sealing) surface means a surface of flange contacting with gasket and having, as a rule, special grooves for its placement;

blind flange means a flat flange without central hole used for blanking off the end face of a pipeline (string or spool piece) or subsea valves;

weldneck flange means a flange with central cylindrical part (neck) protruding from its body and purposed for welding to a pipeline or other pipeline component by girth weld;

swivel flange means a flange consisting of two parts: the inner part of smaller diameter with neck for

welding to a pipe and an outer coupling ring with holes for bolts/studs to be fitted on the inner part;

anchor flange means a flange with increased outer diameter and two necks to be welded in a pipeline by two butt girth welds which is used for limiting longitudinal displacements of a pipeline;

insulating flange connection means a flange connection excluding electric contact between connected flanges by means of electric insulating gaskets and bushings;

ball flange means a flange with central part made as a sphere, which can be turned relative to the body and has a contact surface and holes for connection with bolts/studs;

spiral-wound gasket means a gasket wound of steel tape, which has an angular profile and filler. This gasket may be supplied with outer and/or inner flat adjustment rings;

oval (octagonal) metallic gasket means a steel gasket in the form of oval or octagonal ring, less hard than the sealing surfaces of flanges;

hydraulic accessories for assembly of bolt connections of flanges ("hydra-tight") means a set of hydraulically-driven stops for simultaneous extension of bolts/studs of flange connection to design force value to match contact (sealing) surfaces of flanges.

4.7.2 General.

4.7.2.1 Flanges and flange connections, as a rule, shall be flush relative to the linear part (string, spool piece) of subsea pipeline to provide effective in-line inspection.

4.7.2.2 The parameters of flanges shall be selected based on a combination of operating pressures and temperatures of the pipeline (spool piece) which are determined the according to design documentation of subsea pipeline approved by the Register (for example, ASME B16.5/ANSI) considering transported medium properties.

4.7.2.3 Upon agreement with the Register, the requirement for flanges as separate components may be also applied to the flanges manufactured as parts of equipment or valves.

4.7.2.4 The requirements for flanges are determined in accordance with operational reliability levels of subsea pipelines specified in 1.3.3, Part I "Subsea Pipelines".

4.7.2.5 Requirements for the RS technical supervision during manufacture of flanges shall comply with 2.11 of the SP Guidelines.

4.7.2.6 The flanges shall be connected with bolts/studs, including subsea ones, with use of "hydra-tight" accessories for even pressing of the contact surfaces. At that the length of bolt/stud shall be increased as required (150 to 200 mm).

4.7.2.7 For manufacture of flange forged and cast workpieces at a separate firm, the latter shall be recognized by the Register and the workpieces shall have a Certificate of Conformity issued by the Register.

4.7.3 Requirements for flange design.

4.7.3.1 The flanges shall be manufactured in compliance with the requirements of the international and/or national standards and the technical documentation approved by the Register.

4.7.3.2 The material for manufacture of flanges shall, as a rule, correspond to steel grade used for linear pipes (bends) (refer to 4.5, Part I "Subsea Pipelines") with consideration of the transported medium properties. As a rule, the flanges shall be made of steel with a strength grade up to PCT550(W). When using linear pipes from steel of higher strength, the uniform strength of flanges shall be obtained by increasing the thickness of neck at a welding beveling. The use of flanges made of higher strength materials shall be agreed upon with the Register.

4.7.3.3 The requirements for chemical composition of metal for flanges, gaskets and bolts/studs/nuts may comply with the national and/or international standards to provide approximate equivalence of the requirements to the requirements to subsea pipelines and the technical documentation approved by the Register.

4.7.3.4 For subsea pipelines, as a rule, the types of flanges shown in Fig. 4.7.3.4 are used.

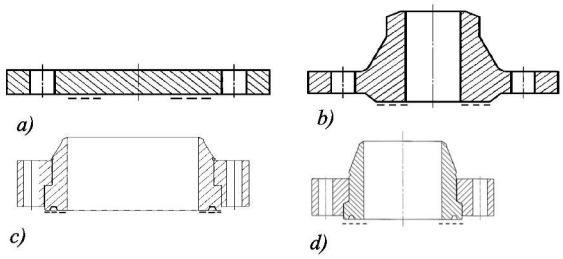

Fig. 4.7.3.4
Main types of flanges for subsea pipelines
(the contact surface is shown with dashed line):
a – blind flange; *b* – weldneck flange; *c* – swivel flange;
d – swivel flange with profiled end face

4.7.3.5 Flange connections of subsea pipelines (spool pieces, strings) shall be tested under the pipeline design pressure and temperature with consideration of possible action of axial forces and bending moment appearing during construction and operation of a pipeline. Finite-element models shall be used for checking calculations. Upon agreement with the Register, the engineering practices based on the international, national and/or bend standards (firm's standards) may be used.

4.7.3.6 The bottom of a groove for the gasket shall not be deeper than the flange edge plane, otherwise the thickness of flange or the height of its central ridge shall be increased to keep the minimum thickness of the flange body. Unless otherwise specified in the documentation Surfaces of groove shall have maximum roughness *Ra* 1,6.

4.7.3.7 The neck of welded flanges, including the anchor ones, shall have cylindrical form or the slope of outer surface not more than 7° as required for forging or casting. Dimensions of the flange neck shall comply with the values specified in Fig. 4.7.3.7. When welding to the pipe of carbon or low-alloy steel with nominal wall thickness of 5 mm and less, a straight edge or a small angle bevel shall be made.

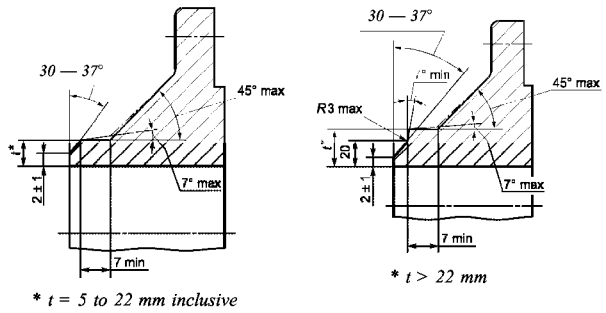

Fig. 4.7.3.7 Dimensions of neck of welded flanges

4.7.3.8 To provide uniform strength of materials of flange and pipe, the minimum thickness of flange neck in the beveling area shall be equal to minimum wall thickness of the pipe to be welded.

For flange materials of lower strength, the minimum thickness of flange neck at the beveling area hall be such as that the product of flange thickness by its yield stress (at the beveling) is at least equal to the product of wall thickness by the minimum yield stress of pipe. The wall thickness of flange neck shall not exceed one and a half wall thickness of pipe and the connection design shall comply with one of the versions shown in Fig. 4.7.3.8.

4.7.3.9 Girth welds of flanges shall have the same strength as that of the pipeline. In case of cyclic high-stress service loading, in addition to the specified in 4.7.3.5, the calculations of fatigue strength shall be made based on the most probable service loading within at least double operational life of the pipeline (unless otherwise specified in the documentation for subsea pipeline, the service life of 100 years is recommended for calculations). The need for calculation is determined in accordance with 5.5.7.

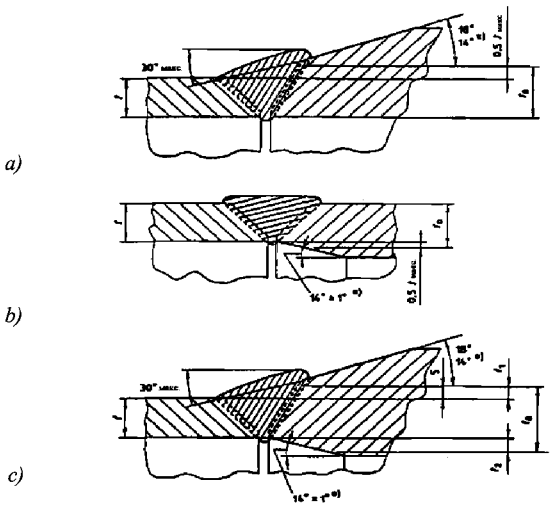

Fig. 4.7.3.8 Welded joint of thickened neck with pipe (option *a* is preferable)

4.7.3.10 Ball flanges and flanges different from those specified in 4.7.3.4 are subject to special consideration by the Register.

4.7.3.11 Gaskets shall be metallic and manufactured in accordance with 4.7.3.3 from the materials resistant to the media transported in the pipeline system and compatible with the flange materials with respect to corrosion destruction during subsea pipeline operation. Gaskets shall have finish and roughness of contact surfaces not worse than that of the flanges.

Hardness of gasket base metal shall be at least by 20 HV less than hardness of the used flange material but not more than 180 HV.

4.7.3.12 The material of bolts/studs, nuts and washers shall meet the requirements of 4.7.3.3 and provide design life in sea water with coating and/or electrochemical protection. Bolts, as a rule, are used on the pipelines (strings, spool pieces) with working pressure up to 2,5 MPa.

4.7.3.12.1 When cathodic protection is used, the hardness of bolts/studs shall be not more than 300 HV to prevent hydrogen-induced cracking.

4.7.3.12.2 When "hydratight" accessories are used (refer to 4.7.2.6), upon agreement with the Register the permissible stresses of bolts/studs may be increased by 20 %.

4.7.3.12.3 The manufactured fasteners shall have the rolled thread, hardness of studs or bolts shall be higher than the hardness of nuts by at least 12 HB. Hardness of washers shall be less than the hardness of bolts/studs and nuts.

4.7.3.12.4 Bolts, studs, nuts and washers of stainless steel may be used but they require effective electrochemical protection for use in sea water.

The bolts made of nickel or other nickel-based solution-hardened alloys are allowed with the mandatory pitting corrosion tests. These materials shall have yield stress of maximum 720 MPa.

4.7.3.13 The material of insulating gaskets and bushings used both for sealing the joints of insulating flanges and for electrical isolation of two parts of flanges shall have the ultimate resistance not less than 260 MPa, electric resistance not less than 10 kOhm and water absorption not more than 0,01 %.

4.7.4 Technical supervision during manufacture of flanges.

4.7.4.1 Flanges for subsea pipelines (strings and spool pieces) shall be made under the RS technical supervision. Series-manufactured flanges (50 and more)

are subject to type approval by the Register in accordance with 2.11 of the SP Guidelines.

If fewer flanges of the same type and size are manufactured, upon agreement with the Register a single approval of flanges is allowed. At the same time, where necessary, the type tests to the extent required by the Register shall be carried out.

4.7.4.2 The list of technical documentation to be reviewed by the Register for approval of the flanges is given in 2.11.3 of the SP Guidelines.

In case of type approval of flanges according to the documentation approved by the Register, a pilot flange (pair of matching flanges) shall be manufactured and tested prior to commencement of series production in accordance with 2.11.4 of the SP Guidelines. Based on the results of type tests for the pilot flanges, the technical documentation may be amended.

4.7.4.3 Flanges shall be manufactured by forging or centrifugal casting followed with machining, at that the forged flanges are preferable. Anchor flanges shall be only forged. Repair of forgings by welding is not allowed.

Upon agreement with the Register, the blind flanges may be manufactured from steel rolled plates.

4.7.4.4 The flanges are subject to heat treatment after rough machining. Tolerances for heat treatment parameters shall be ± 15 °C for holding temperature and ± 20 % for holding time.

The extent and depth of rough machining of forgings and castings are selected considering ultrasonic surface testing requirements.

4.7.4.5 The requirements to non-destructive testing of flanges at all stages of production shall comply with the requirements of the international and/or national standards, technical documentation approved by the Register and 4.8.8.

4.7.4.6 The steel for production of flanges shall be weldable to pipes, spool pieces, hot bends and/or fittings. Weldability shall be verified when testing the specimens of welded field joints, refer to Section 5.

During weldability testing, the following shall be determined:

ultimate tensile resistance of cross-weld specimens, hardness in welded joint zones;

impact energy on the weld material, fusion line and in 2 mm, 5 mm and 20 mm from the fusion line, if the product dimensions permit manufacturing of impact test specimens.

The acceptance criteria shall comply with the requirements to the product base metal.

Previously obtained data on weldability for the same materials may be used with the following restrictions: the diameter to thickness ratio and the cross-section area shall differ maximum twice as compared with the previously obtained data.

4.7.4.7 During type approval of serial flanges, a hydrostatic strength test of representative flange shall be carried out by making a test assembly of two test flanges with gaskets, bolted connection (or anchor flange), adjoining pipe sections and blank covers. The general testing requirements are specified in **4.8.7**.

The manufactured flanges are subject to hydrostatic tests on installed pipelines (strings or spool pieces).

The test pressure shall exceed the flange pressure class (PN) not more than by 1,5 times (at room temperature). Tests at higher pressure are allowed after performing special strength calculations upon agreement with the Register.

4.7.4.8 The number of fasteners selected for mechanical tests shall be the following one per batch of up to 800 pieces; two per batch of up to 8000 pieces; three per batch of up to 22 000 pieces; five per larger batch. A batch comprises products of the same nominal size and material and the same steel melt and heat treatment load. The following tests shall be carried out:

.1 for bolts and studs: hardness testing, finding yield stress, ultimate resistance, elongation at breaking, and Charpy V-notch impact energy at the temperature 10 °C below design value (the latter only for carbon and low-alloy steel). Where it is impossible to cut out an impact test specimen from bolt or stud, the special specimens exposed to equivalent heat treatment shall be used;

.2 for nuts: hardness testing and load test on a hardened threaded mandrel. The load is determined in accordance with dimensions and strength class of nut material, and shall be specified in the technical documentation;

.3 for washers: hardness testing.

Acceptance criteria shall comply with the criteria for connectable steel pipes for subsea pipelines of the same strength grade.

4.8 STEEL BENDS AND FITTINGS

4.8.1 Terms and definitions.

The requirements of this Chapter apply to the following steel products used in subsea pipeline structures for changing the direction of pipeline axis:

hot bend means a pipeline component with the axis bend radius to the nominal diameter ratio of at least 3 and manufactured from a ductile induction-heated seamless or welded mother pipe, which may be a pipe for linear part of subsea pipeline or a specially manufactured pipe (mother pipe);

fitting means a pipeline component used both for changing the direction of axis and for branching the pipeline; it may be made from forged, stamped or cast workpieces by welding and/or machining. Fittings include elbows, T-joints, reducers, plugs, blank covers, etc.;

elbow means a pipeline component made from forged, stamped or cast workpieces, as a rule, having axis bend radius to nominal diameter ratio of at least 3;

sharp elbow means an elbow, which axis bend radius to nominal diameter ratio is less than 1,5;

reducer means a pipeline component for connection of pipes of different diameter and/or wall thickness;

flush T-joint means a T-joint having equal nominal diameters of all the bores;

reducing T-joint means a T-joint with side passage diameter lower than the main passage diameter;

blank cover means a part for covering the pipeline cross-section and welded by a girth weld;

extrados means outer curved section of the curved portion of a bend;

intrados means inner curved section of the curved portion of a bend;

end pieces mean bend parts welded in factory conditions to the branch ends and manufactured from the material of pipes to be connected. The end pieces avoid field welding of heterogeneous materials or different thicknesses.

4.8.2 General.

4.8.2.1 The bends and fittings (hereinafter referred to as "bends", unless otherwise specified), which diameter enables in-line inspection shall be flush relative to the linear part (string, spool piece) of subsea pipeline so that the subsea pipeline could be fully in-line inspected.

4.8.2.2 Upon agreement with the Register, the requirements for fittings may be applied to the bodies of various subsea valves.

4.8.2.3 The requirements for bends are determined in accordance with subsea pipeline operation reliability levels specified in **1.3.3**, Part I "Subsea Pipelines". In any case, the strength grade of bend material shall be not worse than that of linear pipes.

4.8.2.4 Girth welds (if any) in fittings shall be equal in strength with the pipeline. In case of cyclic high-stress service loading, the fatigue calculations shall be made based on the most probable operational loading during at least doubled service life of the pipeline. The need for calculation is determined in accordance with the requirements of 5.5.7.

4.8.2.5 Applied welding procedures shall be qualified in compliance with the Register Rules. The earlier developed procedures may be used only for welding of carbon steel with yield stress up to 450 MPa.

4.8.2.6 Fittings are made of steel of strength grade up to PCT550 (W). When connecting line pipes from steel of higher strength, the uniform strength of fittings is obtained by increasing the thickness. Materials of higher strength for manufacture of fittings may be used upon agreement with the Register.

4.8.2.7 The requirements for the RS technical supervision during manufacture of bends and fittings are specified in **2.11** and **2.12**, respectively, of the SP Guidelines.

4.8.2.8 Raw materials for manufacture of bends (mother pipes, fitting workpieces, etc.) supplied under the RS technical supervision, shall have a certificate issued by the Register, and their manufacturers shall be recognized by the Register.

4.8.2.9 For subsea pipeline with cathodic protection, the compatibility of materials of bends and fittings with the material of linear pipes shall be analyzed to prevent hydrogenation of individual elements of these structures.

4.8.3 Requirements for design of hot bends.

4.8.3.1 Hot bends shall be manufactured in compliance with the requirements of international and/or national standards and the technical documentation approved by the Register.

4.8.3.2 The chemical composition of hot bends metal shall correspond to the pipe steel brands. Upon agreement with the Register, the chemical composition of bend material may be modified with respect to the pipe standards to obtain satisfactory combination of weldability, hardness penetration, strength, ductility, viscosity and corrosion resistance.

4.8.3.3 Hot bends of subsea pipelines (including the ones in spool pieces) shall be tested by the pipeline design pressure and temperature with consideration of possible external actions appearing during construction and operation of pipeline. Finite-element models shall be used for checking calculations. Upon agreement with the Register, the engineering practices based on the international, national and/or branch standards (firm standards) may be used.

Manufacture of hot bends from pipes used for linear pipeline without the specified calculations is not allowed.

4.8.3.4 The Register is entitled not to require the presentation of the results of calculations when the wall thickness of bend extrados t_i is less than the minimum wall thickness of linear pipes t_{min} and the wall thickness of bend intrados is not less than:

$$t_i = t_{min} \frac{2r_b - r_p}{2(r_b - r_p)} \qquad (4.8.3.4)$$

where t_{min} = the minimum design wall thickness of the pipeline linear part with corrosion allowance, in mm;
r_b = axis bend radius, in mm;
r_p = nominal mean radius of a mother pipe, in mm.

4.8.4 Technical supervision during manufacture of hot bends.

4.8.4.1 Hot bends shall be manufactured at the firms recognized by the Register. Upon agreement with the Register, bends may be manufactured at the firm not recognized by Register, provided that additional tests are carried out during manufacture in the scope required for recognition of the firm.

4.8.4.2 The list of technical documentation to be reviewed by the Register for approval of bends is specified in **2.12.3** of the SP Guidelines.

For recognition of bends manufacturer in compliance with the documentation approved by the Register,

the test bend of each type and size shall be manufactured and then checked and tested prior to commencement of manufacture in accordance with 2.12.4 of the SP Guidelines. Based on the results of tests during manufacturer recognition, the technical documentation may be amended.

4.8.4.3 Hot bends shall be manufactured by hot bending method. Use of cold bends is allowed if the plastic deformation does not exceed 1,5 %.

4.8.4.4 The mother pipe for bends may be seamless or have one or two longitudinal welds.

4.8.4.5 The requirements for mother pipes for bends shall fully comply with the requirements for steel pipes soecified in Section **4**, Parts I "Subsea Pipelines", including the requirements for recognition of manufacturers, extent of tests and confirmation of compliance with respect to the specified operational reliability level of the pipeline in compliance with 1.3.3, Part I "Subsea Pipelines".

4.8.4.6 Upon agreement with the Register, the mother pipes for hot bends may be used that manufactured at the firms not recognized by the Register but under technical supervision of a classification society recognized by the Register or a national supervisory body. The extent and results of the tests specified in the manufacturer's certificate shall be approved by the Register.

4.8.4.7 The mother pipe for hot bends shall have pipe body not repaired by welding, no transverse butt welds (welds of roll or plate ends) or girth welds. The mother pipe shall be subject to visual examination and non-destructive testing similarly to a linear pipe, except for the ends if they shall be cut off during manufacture of bend.

During manufacture all mother pipes for bends shall be subject to the factory internal pressure testing.

4.8.4.8 During manufacture, bend bending shall not be interrupted, otherwise the bend shall be rejected. Hot straightening (gauging) after bending, including local heating, shall not be followed with complete heat treatment.

Cold straightening of bends not followed with heat treatment is allowed when plastic deformations do not exceed 1,5 %.

4.8.4.9 The extent of tests and checks of the hot bends, including arrangement and type of specimens during manufacture shall comply with 2.12.4 of the SP Guidelines. Unless otherwise specified, the methods and criteria of acceptance shall comply with the criteria for linear pipes of the corresponding strength grades and requirement level. Tests and checks shall be performed after the final heat treatment.

4.8.4.10 The requirements for mechanical tests shall comply with **4.8.7**.

4.8.4.11 The requirements to non-destructive testing of bends at all stages of manufacture shall comply with the requirements of the international and/or national standards, technical documentation approved by the Register and **4.8.8**.

4.8.5 Requirements for design of fittings.

4.8.5.1 Fittings shall be manufactured in compliance with the requirements of the international and/or national standards and the technical documentation approved by the Register.

4.8.5.2 Fittings capability to withstand internal pressure shall be the same or better than that of the corresponding linear pipes. To determine the required wall thickness in each cross-section of fitting, the finite-element calculations shall be made. Upon agreement with the Register, the engineering practices based on the international, national and/or bend standards (firm standards) may be used.

Strength testing by hydraulic method shall be carried out both during recognition of the manufacturer and manufacture.

4.8.5.3 In cylindrical parts of T-joints and similar fittings with wall thickness close to the minimum wall thickness of pipe, the zones of girth welds and stress concentration zones causing deformation shall be separated.

4.8.5.4 The distance from the beveling to radial transition zone (unless the finite-element calculations demonstrate that nominal stresses in the weld area are achieved at a smaller distance) shall be not less than:

$$3\sqrt{r_p t} \qquad (4.8.5.4)$$

where r_p = mean fitting radius, in mm;
t = refer to Formula (4.8.3.4).

4.8.5.5 The wall thickness of fitting shall be determined in accordance with **4.8**.3.**4**.

4.8.5.6 Blank covers shall have ellipsoid shape with nominal diameter to depth ratio of **4**:1. Spherical blank covers may be manufactured with diameter of head end equal to 0,**9** of nominal diameter, toric transition zone with radius equal to 0,085 of nominal diameter and tangent.

The minimum wall thickness in any point of the blank cover manufactured from the material of the same strength grade as the linear pipe shall be not less than the minimum linear pipeline design wall thickness, including corrosion allowance.

4.8.5.7 The reducers shall consist of a taper, tangents and toric transition zones between them with a radius of minimum 0,085 of the nominal diameter. The reducers without tangents are allowed only if field welding is subject to X-ray testing. Otherwise, the width of tangents shall be sufficient for ultrasonic testing in the proximity of weld joints and field welds.

4.8.5.7.1 The angle of taper α of the reducer shall not exceed 30°. The outer diameter to thickness ratio shall not exceed 100. During manufacture of the reducer from the material of the same strength grade as the pipes to be connected, the wall thickness shall be not less than that

required for the pipe of a greater diameter, except for the tangent and radial transition zone to it from the side of a smaller diameter, where the wall thickness shall be not less than that required for the pipe of a smaller diameter.

4.8.5.7.2 If the reducer is manufactured from another material, the minimum wall thickness in the cross-section t_i, in mm, can be determined by the following formula:

$$t_i = \frac{p_0 D_i}{2\cos\alpha[R_m - 0{,}6p_0]} \qquad (4.8.5.7.2)$$

where p_0 = design pressure, in MPa;
D_i = outer diameter in the cross-section in question measured normal to the longitudinal axis, in mm;
R_m = the minimum ultimate strength of the reducer material, in MPa;
α = angle of taper of the reducer, in deg.

4.8.5.7.3 The reducers from stainless steel shall be designed so that the local stresses do not cause hydrogen-induced cracking.

4.8.5.8 Side taps of the flush and reducer T-joints shall be made integral with the body, for example, by stamping. Welded taps are subject to approval by the Register on the case-to-case basis. This tap shall be located on the side opposite to the longitudinal weld, if the *T*-joint body is made from the welded mother pipe with one longitudinal weld.

Bend radius of outer surface of the tap p_0 shall be not less than the smaller value of 0,05*D* and 30 mm, and shall not exceed [0,1*D* + 12] mm. This radius shall be obtained by forming methods without machining and welding. The minimum wall thickness in the transition zone measured in the plane at 45° to the main passage of the T-joint shall be 1,5 of the minimum design thickness of linear pipeline wall including corrosion allowance.

4.8.6 Technical supervision during manufacture of fittings.

4.8.6.1 Fittings shall be manufactured at the firms recognized by the Register. Upon agreement with the Register, in certain cases the fittings may be manufactured at the firm not recognized by the Register, provided that additional tests are carried out during manufacture in the scope required for the firm recognition.

4.8.6.2 The list of technical documentation to be reviewed by the Register for fittings approval is specified in 2.13.3 of the SP Guidelines.

For recognition of fittings manufacturer in compliance with the documentation approved by the Register, the test fitting of each type and size shall be manufactured and then checked and tested prior to commencement of manufacture in accordance with 2.13.4 of the SP Guidelines. Based on the results of tests during the manufacturer recognition, the technical documentation may be amended.

4.8.6.3 Raw materials for fittings manufacture include blooms, ingots, slabs, sorted forgings, rolled products, seamless or welded pipes made of fully killed steel. Supply of fitting workpieces shall comply with **4.8.2.8**.

The pipes welded by high-frequency current and spiral weld pipes may not be used as workpieces for fittings manufacture.

4.8.6.4 The minimum forging reduction during fittings manufacture shall be **4**:1.

When castings are used for fittings manufacture, the castings shall have metal of the same melt and shall be subject to the following types of heat treatment: homogenization, normalizing and stress relief or homogenization, quenching and tempering.

Hot stamping of carbon and low-alloy steel during fittings manufacture shall be carried out at temperatures below 1100 °C. When microalloying elements preventing the growth of grain (for example, titanium) are added, the forging temperature may be increased up to 1150 °C.

Hot forming of stainless steel shall be carried out at temperature between 1000 and 1150 °C.

4.8.6.5 The longitudinal welds of fittings shall be double-sided as much as technically practicable; the backing rings shall not be used. All welds shall be made with full penetration. Tack welds shall be removed prior to heat treatment.

4.8.6.6 After welding, local heat treatment may be performed by portable resistance-type electric heaters (mats) or other agreed method. A strip along the entire weld of at least five maximum welded thickness in width shall be exposed to such a treatment. Thermal insulation shall be used which width is sufficient to keep the temperature on the edges of the strip not higher than 300 °C.

4.8.6.7 The fittings shall be heat treated after rough machining. The extent and depth of rough machining of forgings and castings prior to heat treatment shall be selected with consideration of ultrasonic surface testing requirements.

4.8.6.8 The end faces of fittings shall be machined for welding. The structure of such a welded joint shall provide smooth transition to the metal of connected linear pipe with mating angle of maximum 30°. During manufacture of fittings from the metal of lower strength grade, the fitting body has increased thickness, therefore the chamfers with an angle of maximum 30° to the fitting body shall be made.

4.8.6.9 The extent of tests and checks of the fittings, including arrangement and type of specimens during manufacture shall comply with 2.13.4 of the SP Guidelines. Unless otherwise specified, the methods and criteria of acceptance shall comply with the criteria for linear pipes of the corresponding strength grades and requirement levels. Tests and checks shall be carried out after the final heat treatment.

4.8.6.10 The requirements for mechanical tests shall comply with **4.8.7**.

4.8.6.11 The requirements for non-destructive testing of ends at all stages of manufacture shall comply with the

requirements of the international and/or national standards, technical documentation approved by the Register and **4.8.8**.

4.8.7 Requirements for mechanical testing of branches and fittings.

4.8.7.1 Bending tests (refer to Section 3 of Appendix **4**).

Face bend test shall be carried out on full-thickness non-straightened specimens with weld reinforcement removed flush from both sides. When the wall thickness exceeds 25 mm, 25 mm thick specimens may be used.

Where the bend angle is 180°, the extended surface in the weld material shall not have tears longer than 3 mm; in base metal and HAZ longer than 3 mm or deeper than 12,5 % of nominal wall thickness. Side surfaces of specimens are allowed to have tears up to 6 mm.

Mandrel diameter shall be not more than

$$D_M = t\left(\frac{1{,}15ID}{0{,}2\exp(-0{,}0013R_{t0,5})ID - t}-1\right) \qquad (4.8.7.1)$$

where t = wall thickness, in mm;
ID = inner diameter of bend where specimens are taken, in mm.

4.8.7.2 Sulphide stress cracking resistance tests (refer also to Section **4** of Appendix **4**).

The tests shall be carried out according to NACE TM 0177, solution *A* (solution *B* upon agreement), at holding time 720 h, and with stress equal to 0,85 of the minimum guaranteed yield stress.

The sample shall be taken from the place exposed to the greatest extension during manufacture. The sample is used to make three longitudinal specimens taken from the inner surface of wall; straightening is allowed. Additional cross-weld samples are taken from the welded mother pipes with the weld in the middle of specimens.

Specimens for four-point bending test shall have dimensions of minimum 115 mm (length) × 15 mm (width) × 5 mm (thickness).

The extended surface of specimens after testing shall be studied with a 10X microscope. Any surface tears or cracks on the extended surface of the specimen indicate unsatisfactory result unless it can be demonstrated that they are not caused by action of sulphide.

4.8.7.3 Hydrogen-induced cracking/stepwise cracking resistance tests (refer also to Section 5 of Appendix **4**).

The tests shall be carried out according to NACE TM 0284, solution *A*, on the longitudinal specimens taken in the places exposed to the greatest extension during manufacture. For welded bends or fittings the specimens shall be also cut out across the weld so that the weld is in the middle part of the working section.

Requirements for mean value of parameters of three metallographic sections cut out from the specimen tested in solution *A*: crack sensitivity ratio CSR ⩽ 2 %, crack length ratio CLR ⩽ 15 %, crack width ratio CTR ⩽ 5 %.

4.8.7.4 Corrosion tests of stainless steel.

Metal of bends with 25 % of chromium is subject to tests for pitting corrosion according to ASTM G**48** to confirm that the applied production process provides the acceptable microstructure. The test shall be carried out at 50 °C with test duration of 24 h.

4.8.8 Requirements for non-destructive testing of bends and fittings.

4.8.8.1 Surface finish shall provide the surface defects detectability. If required, the surface shall be cleaned prior to and/or prepared for ultrasonic testing in compliance with the requirements of the relevant standards.

Visual examination of the entire external surface of bends and internal surface, as much as technically practicable, for delaminations, cracks, scratches or other defects shall be carried out both for linear pipes and their welded joints.

4.8.8.2 100 % of welds shall be subject to X-ray or ultrasonic testing, except for the welds of welded workpieces not deformed during manufacture of bends if the latter were tested at the stage of workpieces.

4.8.8.3 After machining, the end faces of bend shall be tested at a distance of 100 mm from them by non-destructive surface testing methods. Delaminations exceeding 6 mm in the circumferential direction shall be considered as defects.

For bends of requirements level 2, the 50 mm wide strip along each end face shall be ultrasonically tested for delaminations. Delaminations exceeding 6 mm in the circumferential direction or with the area exceeding 100 mm^2 shall be considered defects.

4.8.8.4 Zones of bend body subject to surface tension during manufacture shall be tested by non-destructive surface testing methods. All cracks, folds, delaminations and circular indications exceeding 3 mm in any direction shall be considered defects and repaired.

4.8.8.5 Upon agreement, the ultrasonic testing shall be carried out for transversal defects and delaminations of extended zones of bends.

4.8.8.6 Wall thickness shall be measured by an ultrasonic thickness gauge at the sufficient number of points.

4.8.8.7 During dimensional inspection, angular sizes of bends may be determined by the calculations based on linear dimensions. Out-of-roundness is calculated as the difference between the maximum and the minimum diameters in cross-section related to the nominal diameter, in %.

4.8.9 Repair of bend and fitting defects.

4.8.9.1 The surface defects detected during non-destructive testing shall be repaired by grinding to make smooth transition and meet the requirement for the minimum thickness to be verified by ultrasonic method. All zones repaired by grinding shall be tested by non-

destructive surface testing methods to verify that the defects are fully eliminated.

4.8.9.2 Defects of the bend or fitting body and welds shall not be repaired by welding.

4.8.10 Hydraulic testing of bends and fittings.

4.8.10.1 End blank covers and other temporary testing equipment shall be designed, manufactured and tested to withstand the maximum test pressure (refer to **8.6.4**) and in compliance with the international and/or national standards.

Welds subject to **100** % visual examination shall be free of any coating, paint or protection. One thin layer of primer may be allowed upon agreement.

Welds may be coated or painted if the acceptance criterion is based on pressure.

4.8.10.2 The following requirements shall be applied to the tools and testing equipment, which shall have valid calibration certificates indicating the relevant standards issued not earlier than 6 months ago):

pressure gauges shall have an amplitude minimum **1**,25 times more than the test pressure and the error less than $\pm$0,01 MPa;

temperature gauges and recorders shall have an error not more than $\pm$2 °C;

pressure and temperature recorders shall enable plotting load diagram for the entire test duration.

4.8.10.3 The test medium shall be fresh or specially conditioned sea water. The filling procedure shall minimize the air pockets.

4.8.10.4 The pressure shall be increased gradually to 95 % of test pressure. The remaining 5 % to test pressure shall be reached slowly to make sure that the test pressure is not exceeded. The temperature and pressure shall be stabilized prior to counting the holding time.

The test pressure shall comply with the documentation approved by the Register.

When the acceptance criterion is based on monitoring the pressure variations, the temperature effect on the test pressure shall be calculated before the test. Temperature gauges, if any, shall be placed close to the object under test; the distance between the gauges shall be based on empirical data on the temperature gradients in the object under test.

4.8.10.5 For hydrostatic testing of bends and fittings, the applicable pressure holding time is as follows:

when the acceptance criteria is based on **100** % visual examination, the holding time under test pressure shall be sufficient for **100** % visual examination but not less than 2 h;

when the acceptance criterion is based on the pressure variations, the holding time under test pressure shall be not less than 2 h.

During hydrostatic test of assemblies, for example, spool pieces or strings, the holding time with pressure control shall be increased up to **8** h depending on the extent of testing.

4.8.10.6 The following criteria shall be applied:

100 % visual examination shall detect no leakages (for example, in welds, flanges) and the pressure during the holding time shall not drop by more than **1** %. This criterion is applicable only when there is no risk to miss a leakage;

100 % pressure variation monitoring when during the holding time the pressure shall not drop below 99 %, and pressure curve during the holding time corresponds to the expected one with consideration of temperature and ambient pressure variations.

4.8.10.7 Other test pressure values shall be applied when the components are supplied with the reducers. In this case, the test pressure shall not exceed the value corresponding to 95 % of the minimum yield stress of the reducers. When this value is insufficient for acceptance, the hydraulic testing shall be carried out prior to welding of the reducers. In this case, the welds of the reducers shall be tested after pipeline installation.

5 WELDING

5.1 GENERAL

5.1.1 Terms and definitions.

Weldability means the ability of the material to be properly welded to form welded joints with specified parameters and purpose, which is confirmed by a set of tests of welded joint specimens.

Engineering critical assessment (ECA) means the BS 7910 standard procedure for assessing the permissible defects during welding based on fracture mechanics principles including the use of the special purpose software.

Automated ultrasonic testing (AUT) means the automated method of ultrasonic testing to determine the defect length, depth and height (for example, ToFD and phased antenna array methods). This method is used for non-destructive testing of welds with assessment criteria based on the ECA procedure.

5.1.2 Items of technical supervision.

5.1.2.1 The requirements of this Section cover welding of subsea pipeline system structures made of steel, subject to the RS technical supervision and survey at the stages of manufacture of rolled products for pipes, pipe products, pipeline laying/installation as well as manufacture of products/assemblies for pipelines, including repair by welding and welded joints quality testing in compliance with the requirements of appropriate sections of the SP Rules.

5.1.2.2 During manufacture of welded pipes and welding of pipelines and products for subsea transportation systems, the requirements of Part XIV "Welding" of the Rules for the Classification and Construction of Sea-Going Ships and Part XIII "Welding" of the Rules for the Classification, Construction and Equipment of MODU/FOP shall be met to the extent applicable with regard to the requirements of this Section.

5.1.2.3 The following shall be subject to the RS technical supervision (refer to Table 5.1.2.3 where stages of the RS technical supervision are marked with sign "+"):

weldability tests of rolled flat products (skelp) for manufacture of welded pipes, and seamless pipes in order to determine the quality level of steel as a base metal for its acceptance for manufacture;

welding procedures during manufacture of welded pipes;

welding procedures for butt (field) girth welded joints during pipeline laying/installation;

non-destructive testing procedures for welded joints and welded joint defect acceptance limits, including estimated parameters based on the ECA (the latter is applicable for the butt girth welds only);

repair procedures for welded joints;

certification of welders;

approval of welding consumables.

5.1.2.4 Based on technical supervision at the stages specified in Table 5.1.2.3, the Register shall issue certificates according to the Nomenclature of Items of Technical Supervision (refer to 1.6 of the SP Guidelines) and the requirements of this Section.

The appropriate stages of technical supervision specified in Table 5.1.2.3 may be integrated upon agreement with the Register, depending on extent of production stages integration at the particular firm/contractor (for example, manufacture of rolled flat products and welded pipes therefrom at the same firm).

5.1.2.5 The compliance of welding consumables for subsea pipelines with the RS requirements is geberally confirmed by approval of welding procedures with subsequent issue of Welding Procedure Approval Test Certificates (COTIIC) (form 7.1.33) when using welding consumables, which meet the national and/or international standards in compliance with the requirements of this Section.

Table 5.1.2.3

Register technical supervision during welding processes of subsea pipelines

Stage of the RS technical supervision	Base metal weldability	Approval of welding procedures for longitudinal/spiral welds of welded pipes	Approval of welding processes and obtaining data for ECA butt girth welds	Industrial welding and quality testing of welded joints	Approval of welding consumables (refer to 5.1.2.5)	Certification of welders
Manufacture of rolled flat products (skelp)	+	—	—	—	+	+
Manufacture of pipes:						
seamless	+	—	—	—	+	+
welded	—	+	—	+	+	+
Laying/installation of the pipeline with butt girth welding	—	—	+	+	+	+
Repair welds	—	+	+ (except ECA)	+	+	+

The Register shall approve (certify) the welding consumables and issue the Certificate of Approval for Welding Consumables (COCM) upon the customer's request.

5.2 WELDABILITY TESTS

5.2.1 Weldability tests during manufacture of rolled flat products for production of welded pipes.

5.2.1.1 Weldability tests for rolled flat products (skelp) are carried out to initially determine the quality level of the base metal to approve the steel grade concerned for the welded pipe production.

5.2.1.2 Skelp samples are cut out from $1/4 \pm 1/8$ of the width. The welded joint geometry shall include a single straight edge. Examples of edge preparation and structural elements of the welded joint are specified in Fig. 5.2.1.2. For the metal thickness of 40 mm and above, the symmetric double-edge preparation may be used.

5.2.1.3 Welding of samples shall be carried out by certified welders with the heat input corresponding to two levels — 0,8 and 3,5 kJ/mm. In this case, it is difficult to simulate the factory welding conditions and it is not deemed necessary. The Register is entitled not to require modification of welding conditions for the certification samples.

5.2.1.4 The scope of inspection during weldability test for rolled flat products is specified in Table 5.2.1.4.

5.2.1.5 Determination of standard mechanical properties.

5.2.1.5.1 Tensile test for the skelp welded joint and face bend test are carried out for the full thickness. The mandrel diameter for bend tests is selected according to Table 5.2.1.5.1, evaluation criteria in accordance with Section 3 of Appendix 4.

5.2.1.5.2 For impact bend testing of the welded joints, three specimens located at the fusion line and at a distance of 2,5 and 20 mm from the fusion line from the side of the last pass during welding, at a depth of 2 mm from the rolled product surface shall be manufactured. The additional tests for specimens taken from the opposite surface may be conducted upon the RS request. Test temperature for the impact bend test shall be $T_p - 10$ °C for pipes up to 20 mm thick inclusive and $T_p - 20$ °C or pipes with the greater thickness.

5.2.1.6 Crack tip opening displacement (CTOD) tests of the rolled flat product welded joint are mandatory, unless otherwise agreed with the Register with regard to the data provided by the manufacturer. Tests are carried out at three temperatures to plot the fillet curve. Two temperatures shall be T_p and $T_p - 10$ °C and the third one is selected based on the attained results.

Two heat affected zones (HAZ) are inspected — close to the fusion line ("adjacent" to the welded joint, HAZ I) and close to the etching boundary ("distant", HAZ II). Number of specimens at each temperature and for each HAZ shall be sufficient to gain three correct results. As a rule, it is enough to test 6 specimens at each temperature with a notch at the "adjacent" HAZ and 4 specimens at the "distant" HAZ. The results are estimated according to 5.2.2.4 and 5.3.4.4.

5.2.1.7 Corrosion tests of skelp welded joints may be carried out upon the RS request for rolled flat product welded joints certified for class **L2** and **G2** pipelines.

5.2.2 Weldability tests and approval of welding procedures during pipelines manufacture.

5.2.2.1 The steel pipe manufacture process is subject to the RS technical supervision with respect to the following:

weldability tests of the base metal of the seamless pipes;

approval of welding procedures for factory longitudinal/spiral welded joints of welded pipes;

approval of welding procedures for butt (field) girth welded joints of pipes during pipeline laying/installation.

The specified tasks are solved within the single test program specified in Parts A and B, Table 5.2.2.1.

The scope of tests of welded joints during approval of welding procedures shall comply with Section 6, Part III "Technical Supervision during Manufacture of Materials" of the Rules for Technical Supervision during Construction

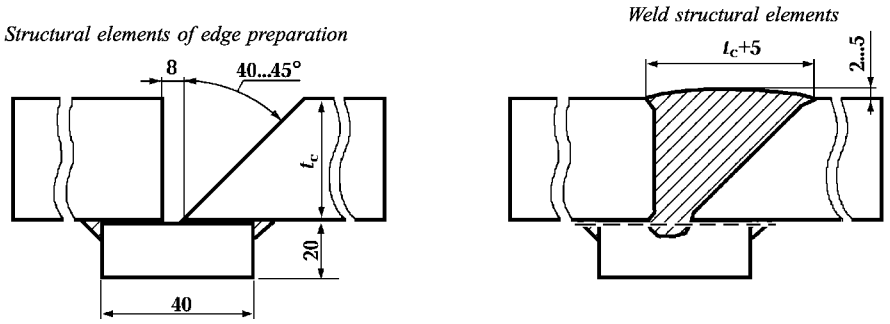

Fig. 5.2.1.2
Welded joints of rolled flat products for weldability tests

Table 5.2.1.4

Scope of inspection during weldability tests for rolled flat products for recognition of the manufacturer

Type of test	Location of samples and location of specimens cutting-out	Minimum number of plates taken from cast/batch	Minimum number of specimens from the plate	Total number of specimens from the cast	Notes
Testing for determination of standard mechanical properties, including:	From one end	1/1	4 samples for two butt welds	4	Heat input of 0,8 and 3,5 kJ/mm
welded joint tensile testing (5.2.1.5.1)	Transverse to the weld, for the full thickness	1/1	4	4	At room temperature
bend testing (5.2.1.5.1)	Transverse to the weld, the specimen centre at the straight edge	1/1	3	3	Face bend from two sides and side bend at room temperature
impact testing (5.2.1.5.2)	Transverse to the weld (notch along the fusion line, heat affected zone at a distance of 2, 5 and 20 mm from the fusion line)	1/1	12//12	12	Test temperature: T_p –10 °C for the skelp with $t_c \leqslant 20$ mm and T_p –20 °C for $t_c > 20$ мм
macrostructure examination, Vickers hardness testing (4.3.5)	Template transverse to the weld	1/1	1	1	
Welded joint CTOD testing[1] (5.2.1.6, 5.2.2.4)	From one end	1/1	60/60	60	Three test temperatures: T_p, T_p –10 °C, the third temperature is based on test results

[1]Except pipes for class **L** and **G** pipelines.

Note. The Register may require skelp welded joint sulphide stress cracking resistance test and hydrogen-induced/stepwise cracking resistance tests if the skelp is designed for class **L2** and **G2** pipelines.

Table 5.2.1.5.1

Mandrel diameter for bend tests of rolled flat products (skelp) and pipe welded joints for recognition of manufacturer

Minimum guaranteed yield stress of base metal, in MPa	Mandrel diameter for face bend test (*T* – skelp/pipe thickness)	Mandrel diameter for side bend test, in mm (specimen is 10 mm thick)
Max. 390	2*T*	30
Above 390 to 620	4*T*	40
690 and above	6*T*	60

of Ships and Manufacture of Materials and Products for Ships with regard to the requirements of this Section.

5.2.2.2 The longitudinal/spiral welds of welded pipes are welded according to adopted welding procedure subject to approval.

The girth welds which simulate the butt field welded joints are made with heat input simulating the welding in the course of pipeline laying. Where this parameter is unknown, the heat input of 0,8 kJ/mm is used. Edge preparation is half-V single straight edge and small angle of vee. The semiautomatic gas-shielded welding is recommended.

5.2.2.3 Tests for determination of standard mechanical properties of the welded joint.

5.2.2.3.1 Tensile tests of the factory welded joint of pipe are carried out for the thickness up to **32** mm for the full thickness with straightening of billets, for greater thicknesses, the tests on cylindrical specimens with straightening of the gripped billet parts only are allowed. Three cylindrical specimens for weld metal tensile testing (from the centre of the weld and along it) shall be additionally manufactured.

Tensile tests of the field welded joint are carried out for the full thickness. The gripped billet parts may be straightened only.

5.2.2.3.2 Full thickness specimens without straightening are tested for the face bend. Preliminary deformation between two planes of pipe specimens is allowed for the face bend from the inside of the pipe. Straightening of specimens for the side bend is not recommended, mandrel diameter is selected according to Table 5.2.1.5.1, evaluation criteria in accordance with Section **3** of Appendix 4.

5.2.2.3.3 For impact bend testing each of three specimens located at the weld centre (for longitudinal/spiral welds only), at the fusion line and at a distance of **2** and 5 mm from the fusion line, at each side of the weld, at a distance of **2** mm from the surface from the outside of the pipe shall be manufactured. Where pipe is more than **26** mm thick, the same set of specimens for the weld root side shall be additionally prepared.

Table 5.2.2.1

Scope of inspection during approval of welding procedures and weldability tests for recognition of pipes manufacturer

Type of test	Location of samples and location of specimens cutting-out	Minimum number of pipes taken from cast/batch	Minimum number of specimens from the pipe	Total number of specimens from the cast/pipe batch	Notes
A. Tests for longitudinal/spiral welded joints of welded pipes and butt (field) girth welded joints during subsea pipeline laying					
Testing for determination of standard mechanical properties, including:	From one end	1/1	—	—	Production heat input
welded joint tensile testing (5.2.2.3.1)	Transverse to the weld, for the full thickness	1/1	2	2	At room temperature
weld metal tensile testing (5.2.2.3.1)	Along the weld, cylindrical specimens	1/1	3	3	At room temperature
bend testing (5.2.2.3.2)	Transverse to the weld	1/1	3	3	Face bend from two sides and side bend at room temperature
Impact testing (5.2.2.3.3)	Transverse to the weld (notch along the weld centre, fusion line, heat affected zone at a distance of 2 and 5 mm from the fusion line)	1/1	12/12 for the pipe with $t_c \leqslant 26$ mm, 24/24 for $t_c > 26$ mm	12 (24)	Test temperature: T_p –10 °C for pipe with $t_c \leqslant 20$ mm and T_p –20 °C for $t_c > 20$ mm
macrostructure examination, Vickers hardness testing (4.3.5)	Template transverse to the weld	1/1	1	1	—
Welded joint CTOD[1] testing (5.2.2.4, 5.3.4.4.2)	From one end (notch at the weld centre and the fusion line)	3/1	9 (at the weld centre) and 18 (at the fusion line)	81	Three test temperatures: T_p, T_p –10 °C, the third temperature is based on test results
Repair welded joint CTOD[1,2] testing (5.2.2.4, 5.3.4.4.2)	From one end (notch at the repair weld centre and repair weld-base metal fusion line)	1/1	9[2] (at the weld centre) and 18[2] (at the fusion line)	27[2]	Three test temperatures: T_p, T_p –10 °C, the third temperature is based on test results
Sulphide stress cracking resistance tests[3]	From one end	3/1	3	9	—
Hydrogen-induced stress cracking/ stepwise cracking resistance tests[3]	From one end	3/1	3	9	—
B. Base metal weldability test on the simulated butt (field) girth welded joints for seamless pipes					
Testing for determination of standard mechanical properties, including	From one end	1/1	—	—	Heat input and type of preparation according to 5.2.2.2
welded joint tensile testing (5.2.1.5.1)	Transverse to the weld	1/1	2	2	At room temperature
bend testing (5.2.1.5.1)	Transverse to the weld	1/1	3	3	Face bend from two sides and side bend at room temperature
impact testing (5.2.1.5.2)	Transverse to the weld (notch along the fusion line, heat affected zone at a distance of 2,5 and 20 mm from the fusion line)	1/1	12/12	12	Test temperature: T_p –10 °C for pipe with $t_c \leqslant 20$ mm and T_p –20 °C for $t_c > 20$ mm
macrostructure examination, Vickers hardness testing (4.3.5)	Template transverse to the weld	1/1	1	1	—

Table 5.2.2.1 — continued

Type of test	Location of samples and location of specimens cutting-out	Minimum number of pipes taken from cast/batch	Minimum number of specimens from the pipe	Total number of specimens from the cast/pipe batch	Notes
Welded joint CTOD[1] testing (5.2.1.6)	From one end (notch along HAZ at the fusion line)	3/1	18 (at the fusion line)	54	Three test temperatures: T_p, T_p –10 °C, the third temperature is based on test results

[1]Except pipes for **L** and **G** pipelines.
[2]The specified set of specimens is subject to testing for each type of repair welding, performed on the entire thickness of the weld or a part thereof
[3]For pipes designed for **L2** and **G2** pipelines.

N o t e. The Register may require welded joint sulphide stress cracking resistance test and hydrogen-induced/stepwise cracking resistance tests if the pipes are designed for **L2** and **G2** pipelines.

5.2.2.4 CTOD tests of the welded joint.

CTOD tests of the welded joint metal are mandatory for welded joints of **L1** — **L3** and **G1** — **G3** class pipelines (refer to **4**.1.**3**). For class **L** and **G** pipelines, CTOD tests of the welded joint metal may be carried out upon the Register request.

The weld metal (for longitudinal/spiral welds only) and HAZ area close to the fusion line shall be inspected. Notch marking on the factory welded joints is carried out at the centre of the weld and at the fusion area, along the line drawn so as the content of weld metal and the base metal on both sides of the line corresponds to (50 ± 10) %. At least three correct results for weld metal and six results for the fusion line shall be obtained at each temperature.

5.2.2.5 Weld fracture tests for longitudinal/spiral welds may be carried out upon the Register request on the "nick-break" specimens according to API 1104 standard with the analysis of defects in fracture according to the agreed procedure.

5.2.2.6 Corrosion tests are mandatory for welded joints of class **L2** and **G2** pipelines (refer to **4**.1.**3**). In other cases, tests may be carried out upon the RS request.

5.2.3 Approval of welding procedures for butt (field) girth welded joints of pipelines.

5.2.3.1 The pipe laying process is subject to the RS technical supervision, including the approval of welding procedures for butt (field) girth welded joints. The initial data required for ECA the procedure shall be obtained (refer to 5.5.**2**). The specified tasks are solved within the single test program corresponding to that specified in Part A, Table 5.**2**.2.1.

5.2.3.2 The approval of welding procedures is basically carried out by testing of standard specimens of welded joints with requirements specified in Section 6, Part **iII** "Technical Supervision during Manufacture of Materials" of the Rules for Technical Supervision during Construction of Ships and Manufacture of Materials and Products for Ships.

5.2.3.3 Where the joint to be welded is not adequately represented by the shape and dimensions of standard test specimens, the approval of welding procedures may be carried out by a preproduction welding tests according to ISO 15613 upon agreement with the Register. In this case, the special purpose test specimens, which reproduce the product welded joint in its all significant attributes, shall be manufactured. Preproduction welding tests shall be carried out to meet the following basic requirements:

.1 test specimens shall be prepared and welded under conditions similar to pipe production conditions. The pipe production conditions shall include moulding, assembling, edge preparation, welding equipment, welding positions, heat sinking and other production and process factors;

.2 where tacks are used for pipe welding, they shall be included in the test specimen;

.3 scope of checks of test specimens shall include external inspection and measurement, surface crack testing (magnetic particle/liquid penetrant testing), hardness tests, macrosections checks as well as separate types of destructive tests upon agreement with the Register;

.4 scope of approval is restricted to the type of joint used for the specimens test;

.5 scope of approval along the thickness of the base metal is normally restricted to the thickness of particular test specimens subjected to tests.

5.2.4 Testing of factory longitudinal/spiral and butt (field) girth welded joints of pipelines.

5.2.4.1 During manufacture of steel pipes with longitudinal/spiral welds, the scope of tests, including that to confirm the quality of welds, shall be assigned according to **4**.2.**3**.6. The test results obtained during approval of welding procedures in the course of recognition of the manufacturer shall be considered (refer to 5.**2**.2).

5.2.4.2 The scope of testing of butt (field) girth welded joints of pipelines shall comply with

the requirements for approval of welding procedures (refer to 5.2.3), unless otherwise agreed. CTOD and corrosion tests of the weld metal shall be carried out upon the RS request.

5.3 PRODUCTION REQUIREMENTS FOR MANUFACTURING PROCESSES OF SUBSEA PIPELINE WELDED STRUCTURES

5.3.1 General.

This Section covers welding operations performed in workshop conditions, during laying or installation. Welding of carbon, low-alloy and clad steels shall be considered. The latter shall be used with the cladding inside for **L2** and **G2** pipelines (refer to 4.1.3) media transportation where the base metal – carbon or low-alloy steels – does not comply with the corrosion requirements.

General welding recommendations shall comply with Section 2, Part XIV "Welding" of the Rules for the Classification and Construction of Sea-Going Ships as well as Section 2, Part XIII "Welding" of the Rules for the Classification, Construction and Equipment of MODU/FOP.

5.3.2 Welding procedures.

5.3.2.1 Unless otherwise agreed with the Register, the following welding procedures may be used:

manual metal arc welding with coated electrodes;
self-shielded tubular-cored arc welding;
tubular-cored metal arc welding with gas shield;
metal inert or active gas welding;
tungsten inert gas welding;
automatic submerged arc welding;
plasma arc welding;
high frequency welding.

5.3.2.2 Welding during manufacture of welded pipes.

In workshop conditions it is recommended to use an automatic submerged arc welding and arc welding with gas shield. As a rule, the base weld from the outside of the pipe shall be made by multi-arc automatic welding machine at a high heat input to increase the deposition rate. The welded joints without backing weld from the inside of the pipe are not recommended for subsea pipeline pipes. For these types of welding the most probable defects are slag inclusions and pores in the weld metal.

5.3.2.3 Welding during laying/installation of pipelines.

For laying/installation of pipelines, the automatic submerged arc welding with gas shield is recommended. The weave welding with edges prepared and a small angle of vee shall be used to increase the deposition rate and decrease the consumption rate of welding consumables. The appropriate shape of weld bead may be achieved due to change in the content of shielding gas. For this type of welding, the most probable defect is a lack of fusion with the base metal.

5.3.3 Welding consumables and mechanical properties of welded joints.

5.3.3.1 Welding consumables used for welding of structures of subsea transportation systems subject to the RS technical supervision shall be approved by the RS. The compliance of welding consumables for subsea pipelines with the RS requirements is normally confirmed by approval of welding procedures with subsequent issue of Welding Procedure Approval Test Certificates (COTПС) (form 7.1.33) when using welding consumables, which meet the national and/or international standards in compliance with the requirements of this Section.

5.3.3.2 The Register shall approve/certificate the welding consumables and issue the Certificate of Approval for Welding Consumables (COCM) upon the customer's request. General provisions for approval of welding consumables shall be established in compliance with Section 4, Part XIV "Welding" of the Rules for the Classification and Construction of Sea-Going Ships as well as with 4.2, Part XIII "Welding" of the Rules for the Classification, Construction and Equipment of MODU/FOP.

Application and approval of welding consumables shall comply with 2.5, Part XIII "Welding" of the Rules for the Classification, Construction and Equipment of MODU/FOP considering the requirements of this Section.

5.3.3.3 For pipe steel welding, only low hydrogen consumables of H5 or H10 category shall be used.

Welding consumables for **L2** and **G2** pipelines (refer to 4.1.3) shall provide sufficient corrosion resistance of welded joints. Special attention shall be paid to prevention of cold cracking within HAZ and in the weld metal during welding of higher and high strength steels. In addition, the requirements for the ratio between the yield stress and tensile strength of weld metal and base metal shall be followed.

5.3.3.4 Detailed operating instructions shall be drawn up for storage, handling, disposal and repeated drying of welding consumables. Special attention shall be paid to handling with welding consumables during underwater "dry welding". Operating instructions shall be prepared for storage and handling of welding consumables on support vessels and welding booths as well as hermetization and transfer to the welding booth.

5.3.3.5 The requirements for standard and special properties of welded jointsare specified in Table 5.3.3.5. Impact bend tests are carried out at T_p –10 °C for pipes up to 20 mm thick inclusive and at T_p –20 °C for pipes with the greater thickness. Unless otherwise specified, specimens are cut out from the surface from the side of the last pass during welding (refer to 5.2.1.5). CTOD tests are carried out at T_p.

Table 5.3.3.5

Requirements to physical and mechanical properties of welded joints

Property	Welded steel									
	PCTW	PCT32W	PCT36W	PCT40W	PCT420W	PCT460W	PCT500W	PCT550W	PCT620W	PCT690W
Yield stress of weld metal, in MPa, min	235	315	355	390	420	460	500	550	620	690
Tensile strength of the weld metal and transverse to the welded joint, MPa, min	400	440	490	510	530	570	610	670	720	770
Vickers hardness of welded joint, max.	300	300	300	300	320	350	370	370	400	400
Bend angle, in degrees, min	120									
Impact energy *KV*, in J, in transverse direction, at T_p –10 °C for pipes with $t_c \leqslant 20$mm and at T_p –20 °C for pipes with $t_c > 20$ mm, min										
Pipelines of all classes										
For all D_a	29	31	36	39	42	46	50	55	62	69
CTOD of welded joint metal and HAZ, in mm, at T_p for **L1 – L3**, **G1 – G3**, pipelines, min										
$t_c \leqslant 20$ mm	—	—	—	—	0,10	0,10	0,10	0,10	0,10	0,15
$20 < t_c \leqslant 30$ mm	—	0,10	0,10	0,10	0,10	0,10	0,15	0,15	0,20	0,20
$30 < t_c \leqslant 40$ mm	0,10	0,10	0,10	0,15	0,15	0,15	0,20	0,20	0,20	0,25
Sulphide stress cracking resistance: no cracks after soaking in a solution within 720 h under stress of 85 % of the specified minimum yield stress										
Resistance to hydrogen induced cracking/stepwise cracking: CLR $\leqslant$ 15 %, CTR $\leqslant$ 5 %, CSR $\leqslant$ 2 %										

Notes: 1. The required average values of impact energy for three specimens at temperature specified in 4.3.3.6 are given. The impact energy may be reduced to 70 % of the required value for one specimen.

2. D_a и t_c beyond the specified limits shall be assigned upon agreement with the Register.

5.3.4 Testing procedures for welded joints.

Testing procedures for welded joints are similar to those for the base metal specified in Section **4** with regard to the features given below.

5.3.4.1 Determination of sulphide stress cracking resistance.

Three welded specimens from the longitudinal weld of one pipe in a batch are subjected to tests. Tests are carried out on a four-point bend full thickness specimen with the weld transverse and with reinforcement being soaked in the test solution within 720 h under stress of 85 % of specified minimal yield stress for base metal of the pipe. The test solution and results assessment shall be the same as for the base metal.

5.3.4.2 Determination of hydrogen-induced cracking/stepwise cracking resistance.

Testing procedure shall be the same as for the base metal, test specimens are taken transverse to the weld with reinforcement, the weld shall be located in the middle of the specimen length.

5.3.4.3 Determination of capability to withstand plastic deformations during bend tests.

Bend tests shall be conducted the same way as for the base metal. Mandrel diameter during tests shall be taken depending on the material strength class (refer to Table 5.2.1.5.1).

The weld reinforcement shall be removed flush with the surface of base metal. When reinforcement is removed, the specimen machining shall be made in its lengthwise direction.

5.3.4.4 Determination of CTOD value.

5.3.4.4.1 General procedures for billet straightening, testing and the size of welded joint specimens shall be the same as for the base metal. The thickness of specimens shall be at least 85 % of t_c with regard to 5.**3.4.4**.10.

Special features of welded joints testing are given below with regard to additional requirement for initial data for ECA.

5.3.4.4.2 Notched specimens with a fatigue pre-crack are used for determination of CTOD values. Cutting out of specimens and notches in the weld metal and HAZ shall be made after the final thermal treatment. The pipe specimens shall be cut out after expansion and subsequent heating which corresponds to thermal action during application of protective coating unless it is proved that this thermal action does not change the material properties. The notch in specimens is located along their thickness, and the direction of crack extension is along the weld.

The notch shall be located in accordance with the certification program approved by the Register. During certification of weldability of the rolled product (skelp) base metal, the notch is located along HAZ I and HAZ II (refer to 5.2.1.6). The scheme of HAZ areas for the skelp multi-run weld for which the CTOD values shall be determined as specified in Fig. 5.**3.4.4**.2-1.

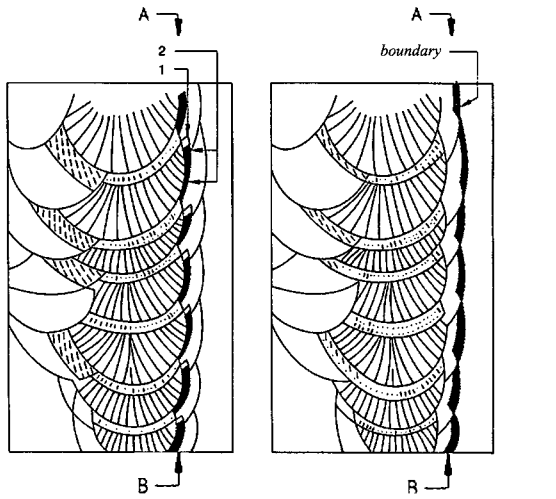

a) double heated between change points (1) and at subchange point (2) in coarse-grained HAZ

b) line between HAZ areas heated between change points and at subchange point
Note. AB – notch line.

Fig. 5.3.4.4.2-1 Multi-run weld HAZ.
Investigated zones in question are marked

For the base metal weldability test on the simulated butt girth welded joints, the notch is located along HAZ I.

For tests of pipe welded joints (weldability of the base metal of the welded pipes on the factory longitudinal/spiral welds, certification of factory and field welding procedures), the notch shall be located at the weld centre and fusion line, along the line drawn so as the content of weld metal and the base metal on both sides of the line corresponds to 50 % ± 10 % (refer to Fig. 5.3.4.4.2-2). In the latter case, the inspected zone is also HAZ I close to the fusion line.

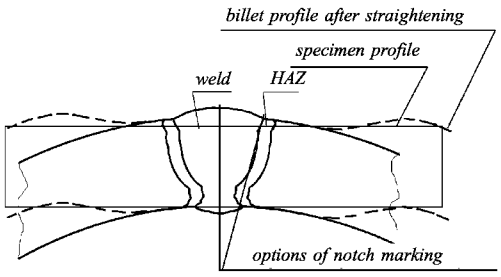

Fig. 5.3.4.4.2-2 Marking of pipe specimens

5.3.4.4.3 Simultaneously with preparation of welded specimens the transverse macrosections shall be cut out from the end of each weld section being investigated (it is recommended to cut out from both ends). They shall be subject to metallographic analysis for checking welding quality, possibility to perform marking according to 5.3.4.4.2 and to determine the hardness according to 5.3.4.4.6, if required.

5.3.4.4.4 When marking-out the notch location in the welded specimen, the end surfaces of specimens (normal to the welding direction) shall be etched and the notch line shall be marked so that to clearly reveal them within the area in question.

The angle between the notch line and the lateral surfaces of the specimen is recommended to be within 90 ± 5°, the deviation from this range shall be specified in the test report.

5.3.4.4.5 Since welded specimens are tested after welding and have a high level of residual welding stresses, the required permissible deviations from the fatigue crack front straightness may be ensured through edge milling procedure (conducted before the crack growth) on the area of the net section 88 to 95 % high including notch top with the accumulated plastic deformation not more than 1 %. Multiple load application is allowed during edge milling. Edge milling depth to evaluate plastic deformation shall be measured with the accuracy at least ± 0,0025 mm.

5.3.4.4.6 Verification of treatment efficiency shall be conducted on the basis of measurement results for the fatigue crack front in the fracture.

An indirect method to determine the yield stress shall be considered where the material of zones with high structural inhomogenuity is tested for which σ_{yts} cannot be directly determined.

The yield stress σ_{yts} at a room temperature is based on measurement results of the Vickers hardness in HAZ and base metal. In particular, the following relationship is suggested for HAZ:

$$\sigma_{yts} = 3{,}28\text{HV} - 221 \qquad (5.3.4.4.6)$$

but not less than the yield stress of base metal and weld metal.

5.3.4.4.7 During specimen test, the rolled flat products (skelp) produced by thermo-mechanical procedure and pipes from these products typically exhibit delaminations parallel to the rolled product surface which result in the break in the deformation curve (rapid partial drop in load followed by its growth, "*pop-in*"). These breaks may be ignored when selecting the critical point to determine the crack resistance values if the change in slope of deformation curve at break (break "relevance") isnot more than 5 %.

5.3.4.4.8 The rated value is the crack resistance deformation parameter. However, the initial data for ECA is a *J*-integral, which is the crack resistance power parameter. During specimen tests both parameters are recommended to be determined. For three-point bend tests of specimens, the displacement along the loading line shall be additionally measured (refer to 5.5.2).

5.3.4.4.9 Metallographic analysis shall be carried out after tests (except the specimens with the notch at the weld centre) to check whether the notch is correct. It is also checked whether the microstructure in question (HAZ I or HAZ II) is located within the central 75 %

of the specimen thickness. Here, the fractured specimen is cut to polished sections according to Fig. 5.3.4.4.9, including the following operations:

cutting out of fractures from both ends of a specimen — from the weld metal and from the base metal;

cutting of fractures across the fracture plane along the fatigue crack line. The lower part of the fracture shall contain the fatigue crack of 2/3 of thickness;

making polished sections and revealing HAZ, taking photographs.

Based on the metallographic results, the location and length of the required microstructure inside the control zone – central 75 % of the specimen thickness shall be established. The minimum percentage of the microstructure in question required to ascertain the correctness of a test is taken to be 15 %, unless otherwise specified by the Register.

Percentage determination of the structure in question along the crack front, in %, as an example of the analysis of coarse-grained structure adjacent to the fusion line is specified in Fig. 5.3.4.4.9.

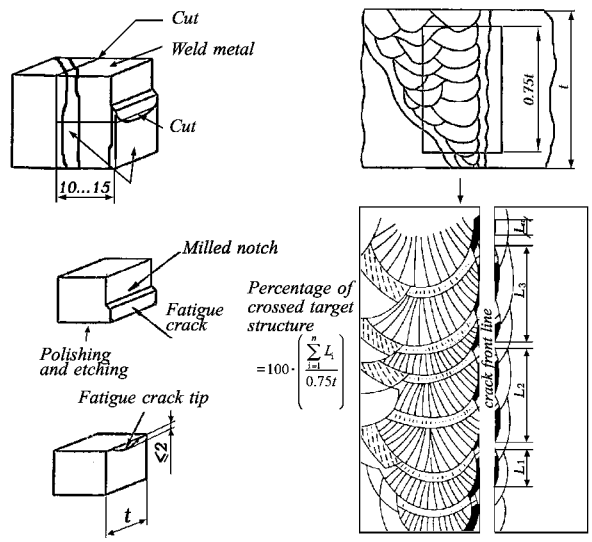

Fig. 5.3.4.4.9 Metallographic examination after test

5.3.4.4.10 For clad steel pipelines, CTOD tests are carried out on the specimens with cladding layer removed.

5.3.5 Production personnel and qualification of welders.

5.3.5.1 All welding operations for structures of subsea transportation systems subject to the RS technical supervision shall be performed by the qualified welders only duly certified and having valid Welder Approval Test Certificate issued by the Register in compliance with Section 5, Part XIV "Welding" of the Rules for the Classification and Construction of Sea-Going Ships.

General requirements for the qualification of personnel shall comply with Section 2, Part XIII "Welding" of the Rules for the Classification, Construction and Equipment of MODU/FOP taking into account the requirements of this Section.

5.3.5.2 Through training and practice prior to certification tests a welder shall gain have understanding of the following:

basic welding procedures;

welding procedure specifications;

relevant methods of non-destructive testing;

acceptance criteria.

5.3.5.3 Welders certification tests are performed for the respective positions of weld during welding, material grades and welding procedures. Parameters of pipe specimen welding procedure shall be agreed upon with the Register. Pipe metal and welding consumables for certification shall be approved by the Register.

Welders shall be certified for single side butt welding of pipes in the required principal position. Upon agreement, welders may be certified for some types of welds, root run welding with specific filler materials and electrodes. Repair welders may be certified for thickness defects repair only, provided these types of weld repairs are made only.

5.3.5.4 Certification shall be carried out using the same or equivalent equipment to be used during installation and at actual workshop conditions, and pipe-laying ship. Other conditions are allowed upon agreement with the Register. Additional certification is required if welding has been interrupted for a period more than 6 months.

5.3.5.5 Welders carrying out underwater "dry welding" shall be first certified for surface welding and shall gain experience in underwater welding. Underwater welding certification tests shall be earried out for the specific preliminary certified welding procedure.

5.3.6 General requirements for welding operations.

5.3.6.1 Welding Procedure Specification (WPS) shall be prepared for all welding procedures covered in this Section and subject to approval in accordance with the RS requirements. WPS shall provide the possibility to fulfil all the specified requirements in practice.

5.3.6.2 WPS shall contain at least the following information:

base metal grade in compliance with the SP Rules requirements and the pipeline class;

pipe diameter and wall thickness (or range);

edge preparation and welded joint configuration, including tolerances;

welding procedure;

number and location of welders;

welding consumables (approved by the Register);

gas mixture and flow rate;

welding rod/wire diameter;

consumption rate of filler wire and flux;

welding parameters: current, voltage, type of current, polarity, welding speed, wire stick out and wire angle for each arc (or range);

number of welding arcs and heads (cold and hot wire feed);

welding positions and directions;

stringer or weaving;

nozzle size;

number of passes (for butt girth welds – before start of pipe-laying vessel move-up);

clamping (inside or outside);

preheat temperature (if applicable);

time intervals between passes;

interpass temperature range;

post weld heat treatment (if applicable).

5.3.6.3 WPS for underwater "dry welding" shall also contain the following information:

water depth (minimum/maximum);

pressure inside the chamber;

gas composition inside the chamber;

maximum humidity level inside the chamber;

temperature inside the chamber (minimum/maximum);

length, type and size of the welding umbilical;

position for voltage measurements;

welding equipment.

5.3.6.4 WPS for repair welding shall be prepared based on a welding procedure certification record for the repair welding. This WPS shall include the following additional information:

method of defect removal, weld preparation;

dimensions of repair welding area;

type and scope of non-destructive testing to be performed after defects removal and repair welding.

5.3.6.5 Where the welding procedure changes, new tests shall be conducted in the following cases unless otherwise agreed with the Register:

.1 base metal:

change to the higher strength grade;

change in the supply condition;

change in the manufacturing process;

any increase in P_{cm} by more than 0,02, in C_{eq} by more than 0,03 and in carbon content by more than 0,02 %;

change of manufacturer;

.2 geometry:

change in the pipe diameter (upon agreement with the Register);

change in the skelp/pipe wall thickness beyond the range from $0{,}75t_c$ to $1{,}5t_c$;

change in edge preparation beyond the tolerances specified in the approved specifications;

line-up clamps during pipe welding: change from external to internal or vice versa;

.3 welding procedure:

any change in the welding type;

change from single-wire to multi-arc welding and vice versa;

any change in the equipment type and model (including underwater welding);

change in the arc parameters affecting the transfer mode or deposit rate;

change in type, diameter and brand of welding consumables;

change in the wire stick-out beyond the tolerances specified in the approved specifications;

change in the gas shield mixture, composition and flow rate (more than 10%);

change in the welding position to a position not complying with Table 5.3.6.5;

change in the welding direction from "vertical down" to "vertical up" or vice versa;

change from single-run to multi-run welding or vice versa;

change in the polarity;

change in the heat input during welding beyond the range of ± 10 % unless otherwise agreed with the Register;

change in time intervals between passes beyond the limits specified in the approved WPS;

decrease in the preheat temperature (if applicable);

any change in the cooling method resulting in shorter cooling time than certified by the test (for installation welding);

any change in the post weld heat treatment procedure (if applicable);

stringer/weave more than three times the nominal diameter where weaving is not provided;

decrease in the number of welders;

.4 additionally for underwater "dry welding":

any change in the pressure inside the welding chamber;

any change in the gas composition inside the chamber; increase of humidity inside the chamber by more than 10 % from the level of certification testing.

Table 5.3.6.5

Certified welding positions

Welding position for certified sample	Welding positions for which additional certification is not required
PA	PA
PC	PA, PC
PF/PG	PA, PF/PG
PC + PF/PG	All
H-L045	All

5.3.7 Welding of clad steel pipelines.

5.3.7.1 General requirements for welding of pipelines with internal cladding layer shall comply with 2.8, Part XIV "Welding" of the Rules for the Classification and Construction of Sea-Going Ships and 2.9, Part XIII "Welding" of the Rules for the Classification, Construction and Equipment of MODU/FOP considering the requirements of this Section.

5.3.7.2 Production welding of corrosion resistant cladding portions may be performed by one of

the welding processes specified in 5.3.2 except self-shielded tubular-cored arc welding and high frequency welding. The welding shall be double sided, whenever possible. Welding of the root pass in single sided (field) welded joints shall normally be made by manual metal arc welding with coated electrodes, tungsten inert gas welding or gas metal arc welding.

5.3.7.3 The final weld edge preparation shall be made by machining. Additional grinding is allowed, provided the grinding wheels shall not be previously used for carbon or low-alloy steels. Thermal cutting shall be limited to plasma arc cutting.

5.3.7.4 Stainless steel wire brushes shall be used for interpass cleaning and cladding of the corrosion-resistant weld metal.

5.3.7.5 Welding consumables for welding of cladding layer shall be selected with regard to corrosion resistance of the welded joint. The application of low-alloy welding consumables for welding of corrosion-resistant materials is not permitted. If it is impossible to guarantee compliance with this requirement, the whole joint shall be welded by corrosion-resistant material.

5.4 INSPECTION AND DEFECT ACCEPTANCE LIMITS FOR WELDED JOINTS

5.4.1 General.

The requirements of this Chapter, unless otherwise specified below, cover the quality inspection for butt (field) girth welds made during construction (laying/installation) of subsea pipelines by means of pipe-laying vessels.

General requirements for the inspection of the welded joints for the subsea pipeline structures shall comply with Section 3, Part XIII "Welding" of the Rules for the Classification, Construction and Equipment of MODU/FOP taking into account the requirements of this Section.

5.4.1.1 Non-destructive testing specialists

5.4.1.1.1 Non-destructive testing for pipeline welded joints shall be carried out by the quality assessment laboratory with the competence and status complying with the accreditation requirements as per national and/or international standards. The competence of the testing laboratory shall be confirmed by the Recognition Certificate of Testing Laboratory (form 7.1.4.3) issued by the Register or other authorized national organization.

5.4.1.1.2 Non-destructive testing shall be performed by certified specialists who are trained and properly qualified and have the appropriate certificates. The certified non-destructive testing specialists who manage the non-destructive test operations and are directly involved in these operations shall be certified to confirm their knowledge in regulations, standards and instructions for safe operations on items subject to the RS technical supervision.

5.4.1.1.3 The specialists qualified for II and III levels are authorized to issue the conclusions based on non-destructive test results. The specialist qualified for 1II level shall be authorized to manage the non-destructive test operations.

The specialists involved in automated ultrasonic testing of welded joints with assessment criteria based on ECA shall have the appropriate certificate confirming their knowledge and skills in operating the particular automated equipment.

5.4.1.2 Non-destructive test equipment.

5.4.1.2.1 Any equipment to be used for non-destructive testing shall comply with the requirements of effective regulatory documentation. The applied flaw detectors as instruments shall have the appropriate instrument type approval certificate and metrological calibration certificate.

5.4.1.2.2 The reference standards and calibration units shall be used for checking basic test parameters and adjustment of flaw detector operation modes (except automated ultrasonic testing systems). The reference standards shall have the appropriate calibration certificates. The calibration units shall be made of welded pipes with the required artificial reflectors, be certified and have the appropriate certificate.

5.4.1.2.3 Ultrasonic system to be used for automated ultrasonic testing shall undergo qualification tests (validation). For requirements to qualification tests of automated ultrasonic testing system, refer to 5.4.2. The system linearity shall be checked at least six months before the expected date of completion of the system operation. For automated ultrasonic testing within the estimated period exceeding six months, the linearity shall be checked directly prior to commencement of operation. The calibration results shall be recorded into the calibration certificate. The calibration certificate shall be made available to verifying organizations (experts).

5.4.1.2.4 For qualification tests of ultrasonic system, checks to save its settings during operation and to track its current performance parameters, the calibration units made of the section of the pipe in the pipeline to be tested shall be used. The calibration units shall have artificial reflectors of flat bed openings 3 mm in diameter and surface cut-outs 1 mm deep. The calibration block shall be branded with its individual serial number.

5.4.1.2.5 All versions of the software for recording, processing and representation of test results shall have individual numbers. The software version number shall be available at all test result representations (on the display and printouts).

The standby power sources shall be provided at the test site.

5.4.2 Qualification tests/validation for the automated ultrasonic testing system.

5.4.2.1 The qualification tests are carried out to confirm the automated ultrasonic testing system is capable of detecting the defects of specific types and sizes, determining their sizes and location in the weld to the specified accuracy.

The automated ultrasonic testing system capability to detect the defect shall be considered sufficient if the possibility to detect the defect of any permissible size estimated based on engineering critical assessment is at least 90% at confidence level of 95%.

5.4.2.2 The qualification test program shall be agreed upon with the Register.

5.4.2.3 Qualification tests are carried out for welded joints with welding method and edge preparation geometry identical to those in the pipeline being tested. The system qualification system shall be performed for welded joints subjected to repair (with appropriate modification of the edge preparation geometry).

5.4.2.4 Qualification tests shall be performed with the use of welds containing the deliberately injected defects which are supposed to be present in welds made by welding methods applied. The minimum number of defects is 10. The defect sizes shall cover all size range for surface and internal defects permitted according to the ECA procedure.

The defects are deliberately injected through violating the welding modes, mechanical saw cuts with or without fusion, placing the tungsten/graphite plates between the prepared edges.

The weld shall be branded with the reference point position relative to which the position of detected defects will be determined.

5.4.2.5 The presence, sizes and position of the injected defects along the perimeter of the welds tested shall be confirmed by radiographic testing. The manual ultrasonic testing and magnetic particle examination may be performed additionally. The report on detected defects shall be confidential.

5.4.2.6 The automated ultrasonic testing for the welded joints shall be carried out as per the developed validation procedure.

The scope of tests shall include the repeated scannings to determine the test results reproducibility when the acoustic system is installed repeatedly. At least one test shall be carried out at a high temperature expected under installation conditions.

5.4.2.7 The test results shall be given in the report which contains data on detected defects, their length and position along the weld perimeter, and their deposition height and depth.

5.4.2.8 The automatic ultrasonic test results shall be confirmed by metallographic examinations of weld cross sections within the detected defects area. The number of cross sections shall be sufficient to ensure that the defect height accuracy estimation is based on at least 29 measurements.

5.4.2.9 The results of automated ultrasonic test system certification tests shall be analyzed with respect to the following:

accuracy of estimated defect height;

accuracy of estimated defect length and position along the weld circumference;

capabilities to determine the defect characteristics by automated ultrasonic testing as compared to the results of destructive tests and radiographic examination;

test results reproducibility at repeated installation of the acoustic system and high temperature.

5.4.2.10 The qualification test report for the automated ultrasonic test system shall at least contain the following:

Description of examined welded specimens;

Description of the test indicating the implemented sensitivity for each of test methods provided;

Recorded data for each detected defects and each cross section of the defect (types of defects, echo amplitudes, sizes, position in the welded) in the course of various non-destructive testing methods and reference destructive tests;

Analysis results for data specified in 5.4.2.9.

5.4.2.11 The performed qualification tests shall remain valid provided that the following parameters are maintained:

welding method and edge preparation geometry (including the repair welds);

acoustic system settings for weld root and top testing;

acoustic system settings for other channels;

calibration units and their reflectors;

data acquisition and processing system;

software version.

5.4.3 Inspection methods and quality assessment for butt welded joints.

5.4.3.1 The scope of testing of all subsea pipeline welded joints is established as follows:

100% visual examination and measurement;

100% automated ultrasonic testing (100% radiographic examination may be used instead as agreed upon with the Register);

100% automated or manual ultrasonic testing for repair welded joints;

100% magnetic particle examination for selected repair welds;

Non-destructive testing techniques with quality assessment criteria for welded joints clarified considering the type of equipment used and the ECA procedure shall be developed for each type of testing and approved by the Register.

5.4.3.2 The scope and methods of non-destructive testing during connection of prelaid pipeline strings (tie-ins) as well as during manufacture of spool pieces are subject to special consideration by the Register.

5.4.3.3 The visual examination and measurement, magnetic particle examination shall be carried out as per effective regulatory documentation. The tested area of the welded joint shall include the external surface of the welded as well as adjacent sections of the base metal located at least 20 mm apart from the fusion line at both side from the weld but not less than the wall thickness of the pipeline welded. For quality assessment criteria for welded joints in the course of visual and magnetic particle examinations, refer Table 5.4.3.3. Any defects not listed in the tables are allowed as agreed upon with the Register.

5.4.3.4 The size of permissible defects for automated ultrasonic testing of butt girth welds shall be established based on engineering critical assessment as required by the customer and in case of limitations as given below. The defect acceptance limits (permissible ratios between length and depth/height of surface and internal defects) are results of the ECA procedure to be used as follows:

cracks shall be not permitted;

the error, in mm, for the specific non-destructive testing method (for example, in-line inspection) shall be added to the calculated values. This error shall be determined in the course of verification/qualification tests (validation) for this method by comparing the readings obtained in several measurements and/or cutting of test defective welds to get polished sections;

the permissible depth/height of the defect shall be limited to $0{,}25t_c$;

maximum length of defects shall not exceed 1/8 of the pipe circumference.

5.4.3.5 The ECA procedure shall not be considered as an alternative to the proper quality of welds. The ECA procedure results are normally considered as a supplement, which extends the requirements to the defect parameters prescribed for the separate non-destructive test methods (refer to Tables 5.4.3.3, 5.4.3.6-1 and 5.4.3.6-2). When the systematically repeated defects (two times and more within a shift) are detected in girth welds equal to and greater than 0,8 of maximum permissible limits in terms of the ECA procedure, the technological process shall be stopped to analyze and remedy their causes.

5.4.3.6 Quality assessment criteria for the radiographic testing shall correspond to those specified in Table 5.4.3.6 1. The size of permissible defects in the course of ultrasonic examination conducted with the manual echo-technique using the general purpose flaw detector shall correspond to Table 5.4.3.6-2.

5.4.3.7 Automated ultrasonic testing for welds during laying of pipeline.

5.4.3.7.1 The detailed automated ultrasonic testing procedure shall be developed for each wall thickness and geometry of the weld. This procedure shall be agreed upon with the Register.

This procedure shall at least contain the following:

function description for equipment;

references to standards and instructions used;

number of examined zones along the welded joint thickness;

operating instructions for scanning device, acoustic unit, computer system;

hardware and software instructions for test results recording, processing, displaying, representation and storage;

equipment set-up procedure;

Таблица 5.4.3.3

Quality assessment criteria for the visual and magnetic particle examinations of welded joints

Type of defect	Criterion	
External profile	Welds shall have a plain surface and ensure smooth transition to the base metal, and shall not overlap beyond the edge preparation by more than 3 mm (6 mm for automatic submerged arc welding)	
Reinforcement	External reinforcement: up to $0{,}2t_c$ but max. 4 mm. Internal reinforcement: up to $0{,}2t_c$ but max. 3 mm	
Concavity	Outside concavity is not permitted. Inside concavity shall ensure smooth transition to the base metal, the weld thickness at any point shall not be less than t_c.	
Edge displacement	Longitudinal/spiral weld: up to $0{,}1t_c$ but max. 2 mm Girth butt weld: up to $0{,}15t_c$ but max. 3 mm	
Cracks	Not permitted	
Undercuts	Individual:	
	Depth d: $d > 1{,}0$ mm $1{,}0$ mm $\geqslant d > 0{,}5$ mm $0{,}5$ mm $\geqslant d > 0{,}2$ mm $d \leqslant 0{,}2$ mm	Permissible length: not permitted 50 mm 100 mm unlimited
	Accumulated length of undercuts of 1,0 mm $\geqslant$ d > 0,2 mm at any part of the weld 300 mm long: $< 4t_c$, but max. 100 mm	
Surface porosity	Not permitted	
Arc burns	Not permitted	
Dents	Depth < 1,5 mm, length up to $1/4D_a$ (D_a — pipe diameter)	

Table 5.4.3.6-1

Quality assessment criteria for the radiographic testing of welded joints

Type of defect	Criterion	
	Separate defects	Maximum accumulated size in any 300 mm weld length
Porosity Scattered		
Cluster	Diameter less than $t_c/4$, maximum 3 mm Pores less than 2 mm, cluster diameter maximum 12 mm, pore cluster area less than 10 %.	Maximum 3 % of the area in question One cluster
Pores "on-line"	Diameter less than 2 mm, group length less than t_c	Two lines
Slag		
Isolated	Diameter less than 3 mm	12 mm, maximum 4 off separated minimum 50 mm
Single or parallel lines	Width less than 1,5 mm	$2t_c$, maximum 50 mm
Inclusions		
Tungsten	Diameter less than 3 mm	12 mm, maximum 4 off separated minimum 50 mm
Copper, wire	Not permitted, if detected	—
Lack of penetration	Length less than t_c, maximum 25 mm Width less than 1,5 mm	Less than t_c, maximum 25 mm
Lack of fusion	Not permitted	—
Cracks	Not permitted	—
Weld concavity inside the pipe	Refer to Table 5.3.2.3-1	—
Undercuts inside the pipe	Depth less than $t_c/10$, maximum 1 mm	Less than t_c, maximum 25 mm
Excessive penetration	Less than $t_c/5$, maximum 3 mm over the length to t_c, maximum 25 mm	Less than $2t_c$, maximum 50 mm

Notes: 1. Group of defects separated by less than the width of the smallest defect in a group shall be considered as one defect.

2. Isolated defects are separated by more than 5 times the size of the largest discontinuity.

3. Total accumulation of discontinuities in any 300 mm weld length (total size) - less than $3t_c$, maximum 100 mm excluding porosity; total weld length — less than 12 %.

4. Accumulation of discontinuities in the cross section of weld that may constitute wormholes or reduce the effective weld thickness with more than $t_c/3$ is not acceptable.

5. No defects are allowed over the intersection of welds.

Table 5.4.3.6-2

Quality assessment criteria for the ultrasonic testing of welded joints

Maximum permitted defect echo amplitude	Maximum length of permitted discontinuities L, in mm
Base level[1] + 4 dB	$L < t_c/2$, maximum 10 mm
Base level −2 dB	$L > t_c/2$, maximum t or 25 mm
Base level −6 dB	$L > t_c$, maximum 25 mm
Base level −6 dB	In the near-surface zones excluding the centre of the welded joint with thickness $t_c/3$, the accumulated length of defects in any 300 mm of weld length less than t_c, maximum 50 mm In the centre of the welded joint with thickness $t_c/3$ the accumulated length of defects in any 300 mm weld length less than $2t_c$, maximum 50 mm
Transverse defects of any length (type "T" defects) are not permitted[3]	

[1]The base (reference) level of sensitivity is obtained from ∅3 mm side hole drilling in the reference specimen. Other methods for setting the base level are allowed if they provide the same sensitivity of testing. Requirements for specimens to alignment sensitivity shall be specified in the testing procedure.

[2]Where the base metal thickness is less than 12 mm the mid-thickness of the welded joint is not considered.

[3]Defect shall be considered as transverse if its echo amplitude transversely exceeds the echo amplitude from the weld longitudinally with more than 6 dB greater than the echo amplitude at an angle of 90 ±15° to the longitudinal weld axis.

Notes: 1. Where only one side of the welded joint can be tested the maximum permissible defect echo amplitude (the left column in the table) shall be reduced by 6 dB (twice).

2. Weld sections, defects interpretation that are doubtful and cannot be established with certainty shall be tested with the radiographic method and evaluated on the basis of the radiographic testing criteria.

3. Accumulated discontinuity length with echo amplitude equal of reference level −6 dB and above shall not exceed $3t_c$, maximum 100 mm in any weld length of 300 mm nor more than 12 % of total weld length.

4. No defects are allowed over the intersection of welds.

description and drawing of calibration units including the type, dimensions and location of reflectors;

equipment calibration intervals;

scanning surface condition and method for its preparation including temperature range;

weld assessment criteria based on test results;

reporting instructions.

5.4.3.7.2 The ultrasonic system used for in-production testing shall correspond to configuration and settings of the system used for qualification tests (validation).

5.4.3.7.3 Prior to commencement of examination, the system shall be tested. When the whole system is calibrated, the weld shall be scanned with repeated calibration using the calibration unit. In case of deviation in echo amplitude from the calibration unit reflectors more than by 2 dB from the initial calibration value, the calibration shall be corrected. The calibration is considered acceptable in case of three satisfactory scannings of the weld with calibration retained.

5.4.3.7.4 Prior to commencement of examination, the failure in power supply shall be simulated and the system operation from the alternative power supply unit shall be checked without loss of test results.

5.4.3.7.5 Prior to commencement of weld examination, the case height for each transducer included into acoustic system shall be measured.

5.4.3.7.6 All welded joints submitted to non-destructive testing shall be serviceable (absence of mechanical damages, cavities, dents, defective paint coating and other defects). The marking system shall meet the requirements of regulatory documentation.

5.4.3.7.7 The transition from the base metal to the deposited metal shall be smooth and free of undercuts and overlaps. The weld width and height shall be uniform.

5.4.3.8 Requirements for manual ultrasonic testing for repair welds.

The manual ultrasonic testing shall be carried out according to agreed procedures/instructions which contain at least the following information:

geometry and dimensions of the tested welded joint, welding method;

base and welding consumables;

equipment used (flaw detectors, transducers, state reference standards for calibration, samples for sensitivity set-up);

requirements to condition of the scanning surface including its maximum temperature;

method, basic test parameters, scanning schemes;

test sensitivity;

sensitivity set-up procedure;

assessment criteria for detected defects;

reporting and test results recording;

the manual ultrasonic testing procedure shall be agreed upon with the Register;

qualification tests for the manual ultrasonic testing procedure are not required;

5.4.3.9 Rules for combination of non-destructive test readings.

5.4.3.9.1 When isolating the closely spaced defects, the following rules for ultrasonic testing readings shall be used:

If $s < (b_1 + b_2)/2$ (refer to Fig. 5.4.3.9.1, *a*), two internal defects are combined and shall be considered as a single defect with height equal to $b = b_1 + b_2 + s$.

If $s < \min(l_1, l_2)$ (refer to Fig. 5.4.3.9.1, *b*), lengthwise two defects shall be considered as a single defect with length equal to $l = l_1 + l_2 + s$.

If $s < b_1/2$, (refer to Fig. 5.4.3.9.1, *c*), subsurface defect shall be considered as a surface defect with height equal to $b = b_1 + s$.

All isolated defects shall be considered as coplanar defects.

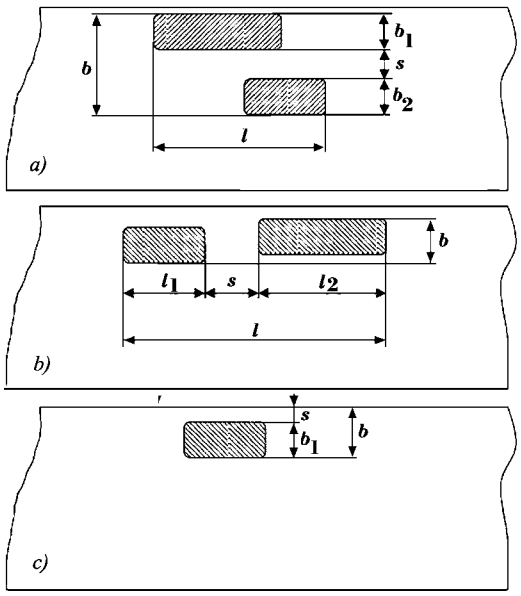

Fig. 5.4.3.9.1
Defect combination options

5.4.3.9.2 The readings for the chain consisting of more than two defects are combined in a similar way by considering the combined defect as an initial one for the subsequent analysis.

Where the defect depth and height cannot be determined by test methods applied, lengthwise two defects shall be considered as a single one with length equal to $l = l_1 + l_2 + s$, if $s < \min(l_1, l_2)$ (Fig. 5.4.3.9.1, *b*).

5.5 APPLICATION OF ENGINEERING CRITICAL ASSESSMENT TO DETERMINE THE PERMISSIBLE DEFECTS FOR GIRTH WELDS

5.5.1 General provisions and application.

5.5.1.1 Engineering critical assessment (the ECA procedure) shall be carried out upon the customer

requirements and based on material fracture mechanics approach.

The strength condition based on brittle fracture prevention criterion is taken as follows:

$$J \leqslant [J] = J_c/n, \qquad (5.5.1.1)$$

where J = design value of J-integral which is the load parameter for the defective/cracked structural member based on the level of structural operating/test stresses inherent for the selected design case with regard to the possible level of process residual stresses, in N/mm;

$[J]$ = permissible value of J, in N/mm, assigned depending on crack resistance parameter J_c;

n = safety factor.

5.5.1.2 The assessment shall be carried out by defining initial acceptance criteria for welded joint defects in the course of automated ultrasonic testing and shall ensure that these defects allowed for the butt girth welds during pipeline construction do not result in brittle fracture both in the initial condition and throughout pipeline service life when their size may be increased due to in-service loading stresses. Engineering critical assessment takes into account several design cases which may have appropriate temperatures and loads acting on the pipeline including loads during pipeline laying in marine environment as well as considers the residual welding and assembling stresses in the pipe. The safety factor is assigned to account for probabilistic nature of loads and material properties.

The ECA procedure makes it possible to obtain less stringent defect criteria for pipeline welded joints when using the advanced precision non-destructive techniques and equipment.

5.5.1.3 The ECA procedure is recommended for subsea pipelines subject to bending during laying to ensure structural integrity of welded joints at all stages of pipeline construction and operation (refer to 5.5.6.1) and requires application of automated ultrasonic testing.

5.5.1.4 Basically, the ECA procedure may be used for analyzing the fitness-for-service for the pipeline in operation. In such a case, the ECA procedure shall establish whether the structure in its current condition is safe for operation, which sizes of defects are permissible in this case, whether the defects detected by means in-line inspection or subsea pipeline survey may be repaired.

5.5.2 Initial information.

5.5.2.1 The following information on materials and welded joints is required for assessments:

.1 yield stress and tensile strength of the base metal and weld metal for temperatures corresponding to all design cases if these temperatures differ from the room temperature by more than 20 °C;

.2 crack resistance data for the base metal and welded joints (weld metal, fusion line) at several temperatures including/covering the temperature range corresponding to design cases. These data shall be obtained by experiments on a representative number of specimens as per internationally-recognized standards using the calibrated equipment. The tests shall be carried out under the RS technical supervision or in the laboratory recognized by the Register.

5.5.2.2 The scope of tests is specified in Part A, Table 5.2.2.1. The test program shall be agreed upon with the Register.

However, the following shall be taken into consideration:

.1 when some part of the temperature range corresponding to design case is within the area of fully ductile condition for the specimen material (the peak loading without breaks in curve is achieved for tests of all specimens) and these temperatures are less than 100 °C, the test temperature range shall be limited from the top by the temperature at which the specified condition of the material is achieved;

.2 in case of limited scope of tests, factor V_0 shall be assigned that is related to the reliability of the available information and increasing the safety factor in the strength condition.

5.5.3 Special tests for initial data acquisition.

5.5.3.1 The experiments to determine crack resistance value are carried out for the base metal and factory welded joints using SENB and CT rectangular section specimens, at least $1{,}7t_c$ high and $0{,}85t_c$ thick located traverse to the weld in question, with the notch along the thickness, fracture propagation direction along the weld when options of notch location are according to Part A, Table 5.2.2.1.

5.5.3.2 The crack resistance values shall correspond to one of critical events: unstable fracture after stable crack growth or without it, or first achievement of maximum load flat region. If the specimen is not fractured but unloaded (e.g., during tests to determine *J-R* curve), the results may be used only if they are obtained before the peak load in the curve is achieved. However, in such a case, it is difficult to calculate the dispersion factor so this matter shall be agreed upon with the Register.

5.5.3.3 SENB specimens are preferable since the appropriate tooling shall be made for each type and size of CT specimens. The minimum thickness of CT specimens is normally limited by the equipment capabilities. However, these specimens require the extensometer, which measures the displacement along the loading line. The relative displacement of tooling supports may be measured using extensometer. Determination of displacement along the loading line is allowed with the deduction of testing machine compliance provided by the certified software.

5.5.3.4 The determination of CTOD value only and recalculation of J integral value for each t-specimen are allowed by the following formula:

$$(J_c)_i = 1{,}65\sigma_{yts}(\delta_c)_i \qquad (5.5.3.4)$$

where δ_c = critical value of CTOD, in mm, in this case the factor V_0 shall equal to 0,10:

σ_{yts} = refer to Formula (5.3.4.4.6).

5.5.3.5 Testing of SENB square section specimens less than $0{,}85t_c$ thick with the notch along the thickness are not recommended. When the test program for these specimens is agreed with the Register, the factor V_0 shall be taken 0,15.

Tests for the following specimens are not recommended:

SENB square section specimens with the notch from the surface. When the test program for these specimens is agreed with the Register, the factor V_0 shall be taken 0,20;

SENT specimens with the notch from the surface. When the test program for these specimens is agreed with the Register, the factor V_0 shall be taken 0,20;

specimens of decreased thickness. When the test program for these specimens is agreed with the Register, the factor V_0 shall be taken 0,20 if SENB rectangular section specimens or CT specimens with thickness from $0{,}5t_c$ to $0{,}85t_c$ are tested.

When several above-mentioned events occur concurrently, the accumulated value of V_0 shall be taken not exceeding 0,30.

5.5.3.6 Crack resistance parameter J_c shall be determined in respect to the specific design structural temperature T_p.

Crack resistance experimental data shall be limited at the top by J_{max} value determined by the following formula:

$$J_{\max} = t_c \frac{(R_{p0,2} + R_m)}{40}. \qquad (5.5.3.6)$$

$R_{p0,2}$ may be replaced with $R_{t0,5}$. When $(J_c)_i > J_{\max}$, $(J_c)_i = J_{\max}$ is taken.

Crack resistance data shall be obtained at several temperatures (N) with T_p within this interval. In this case, proceed to 5.5.4.

In case of fully ductile condition of the material obtained during tests of specimens, or in case of data at one temperature only, proceed to 5.5.5.

5.5.4 Approximation of temperature interval for ductile-brittle transition.

Experimental points $[T_i, (J_c)_i]$ are plotted on a graph with logarithmic Y-axis and the following approximation curve is plotted:

$$\ln J_c = AT_i + B, \qquad (5.5.4\text{-}1)$$

where coefficients are calculated analytically by the following formulae:

$$A = \frac{\sum_{i=1}^{m} T_i \sum_{i=1}^{m} \ln(J_c)_i - m \sum_{i=1}^{m} [T_i \ln(J_c)_i]}{\left(\sum_{i=1}^{m} T_i\right)^2 - m \sum_{i=1}^{m} (T_i^2)}; \qquad (5.5.4\text{-}2)$$

$$B = \frac{\sum_{i=1}^{m} T_i \sum_{i=1}^{m} [T_i \cdot \ln(J_c)_i] - \sum_{i=1}^{m} (T_i^2) \sum_{i=1}^{m} \ln(J_c)_i}{\left(\sum_{i=1}^{m} T_i\right)^2 - m \sum_{i=1}^{m} (T_i^2)}. \qquad (5.5.4\text{-}3)$$

For assessments, the value shall be taken:

$$J_c = \exp(AT_p + B). \qquad (5.5.4\text{-}4)$$

The dispersion factor for each test temperature V_j shall be determined by the following formula:

$$V_j = \sqrt{\frac{\sum_{i=1}^{m_j} (J_c)_i^2}{[\exp(AT_j + B)]^2 m_j} - 1} \qquad (5.5.4\text{-}5)$$

where j = number of data group corresponding to one test temperature, N groups in total;
m_j = quantity of data at this temperature, $m = \sum_{j=1}^{N} m_j$.

For assessments, the following shall be taken:

$$V = \sum_{j=1}^{N} V_j / N. \qquad (5.5.4\text{-}6)$$

5.5.5 Approximation of the upper shelf and data at one temperature.

When the test temperature interval, including T_p, corresponds to fully ductile condition of the material (all experimental points correspond to the first achievement of maximum load flat region at both test temperatures), only the upper shelf data shall be used for approximation (obtained regardless of test temperature). The following shall be taken:

$$J_c = \sum_{i=1}^{m} (J_c)_i / m. \qquad (5.5.5\text{-}1)$$

The dispersion factor V shall be determined by the formula

$$V = \sqrt{\frac{\sum_{i=1}^{m} (J_c)_i^2}{J_c^2 m} - 1}. \qquad (5.5.5\text{-}2)$$

The same formulas shall be used in case of the data obtained for one test temperature only.

The value of V is limited from the top:

$$V \leqslant \frac{J_{\max}}{3J_c}. \qquad (5.5.5\text{-}3)$$

5.5.6 Design cases.

5.5.6.1 Design procedures implemented during inspection of subsea pipeline welded joints shall include the following design cases of loading of circular welded joints:

.1 laying/repeated lifting (single loading, bending and membrane stresses in the pipe, no internal pressure);

.2 hydraulic testing (single loading, membrane stresses in the pipe, internal pressure);

.3 service (long-lasting loading, membrane stresses, possible bending, wave action, seismic action, internal pressure differences).

5.5.6.2 The safety factor for each design case shall be calculated depending on information content and dispersion of crack resistance data for the material applied:

$$n = \left(5(V_0 + V)^2 + 1\right)^{n_1}. \qquad (5.5.6.2)$$

The following shall be taken into account:

.1 temperatures for different design cases may vary. Each case has different acceptable levels for fracture possibility P, which is considered in safety factor n_1 according to Table 5.5.6.2. The variation in material properties due to temperature shall be also considered.

.2 possible buckling of pipe during laying shall be considered at the pipeline design stage and not considered during inspection of welded joints.

Table 5.5.6.2

Values of safety factor n_1

Design case	Values of safety factor n_1
Laying, repeated lifting	1,5
Standard in-service loading	2,0
Hydraulic testing	1,0

5.5.7 Tests for accounting the in-service cyclic loading.

5.5.7.1 Details on in-service loading spectrum may be obtained for the items being in service for a long time. This information may be used for new pipeline systems with similar parameters.

The specified information makes it possible to estimate the number of loading cycles under internal pressure within the service life. The random process is mapped by rain-flow method with scaling to the block loading mode. When the available information is insufficient, the cyclic loading may be considered in a single block. Details on seismic loads shall be added to in-service loading as an additional cycle of block with the maximum stress amplitude.

5.5.7.2 When the subsea pipeline shall be buried in a trench throughout its length, fhe wave action shall be omitted. For loose-laying subsea pipelines, the individual accounting procedure agreed with the Register shall be used.

5.5.7.3 Based on the specified data, the analysis for accounting of the cyclic component of in-service loading shall be performed. The effective stresses shall be determined on the basis of a linear addition principle.

5.5.7.4 It is considered conservative to ignore the cyclic component if the point corresponding to the effective stress range and number of in-service loading cycles is located below the *S-N* curve for welded joints derived by experiments or as per effective regulatory documentation. The curves specified in Fig. 5.5.7.4 are recommended. The appropriate curve shall be selected depending on protection of the welded joint metal.

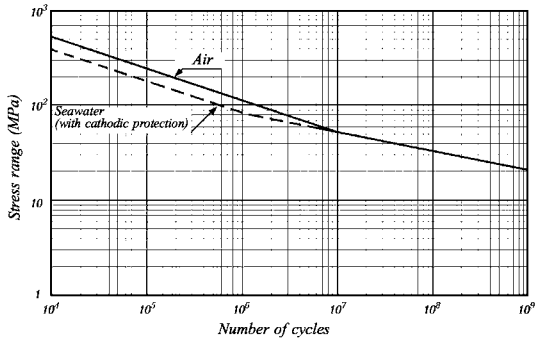

Fig. 5.5.7.4
S-N curve for pipeline welded joints

5.5.8 Requirements for the ECA procedure.

5.5.8.1 The adopted ECA procedure shall ensure the fulfilment of the brittle fracture prevention condition (refer to 5.5.1) and agreed upon with the Register for each type and size of pipes and loading condition. Where software codes are used for calculation, they shall be recognized by the Register or other classification societies.

5.5.8.2 Design points for ECA are the areas with the most probable defects in welded joints:

boundary of the weld reinforcement from the side of the pipe external surface;

boundary of the weld reinforcement (in case of backing weld), or weld root from the side of the pipe internal surface;

defect along the fusion line.

The welded joint loading shall be determined with regard to residual welding, assembling and in-service stresses, and 5.5.6.

5.5.9 Verification of established defect acceptance limits.

5.5.9.1 This procedure shall be used for verification of suitability of the established sizes of defects adopted for the automated ultrasonic testing.

The required parameter for verification assessments is factor n_1 (refer to 5.5.6.2). If this parameter is not less than values specified in Table 5.5.6.2, the strength condition in terms of brittle fracture is fulfilled. If this parameter is above 1,0 but less than values specified

in Table 5.5.6.2, it may be stated that the brittle fracture is unlikely. In the latter case, the acceptability of the particular size of the defect shall be additionally agreed upon with the Register and documented as a separate decision.

5.5.9.2 The verification assessment shall be carried out by taking the surface semi-elliptic/internal elliptic crack with ratio of semi-axes l/a (extension along the weld to the depth of the surface defect or half-height of the internal defect) according to the verification standards for the design defect.

Values of V and V_0 in Formula (5.5.6.2) shall be calculated for each design point selected according to 5.5.8 depending on the information content and dispersion of crack resistance data for the material used.

5.5.9.3 In the absence of crack resistance data, J_c may be roughly estimated (but not recommended) on the basis of calculated impact energy of Charpy specimens (KV, in J) with section of 10×10 mm at temperature of $T_p - \Delta T$, with at least three Charpy specimens for the base metal or weld metal and six specimens for HAZ. V_0 shall be taken 0,3. The average estimate of $(J_c)_i$, in N/mm, shall be determined by the following formula:

$$(J_c)_i = 1{,}8\mathrm{KV}_i. \qquad (5.5.9.3\text{-}1)$$

The value of temperature drop ΔT for Charpy specimen test shall be taken by the following formula:

$$\Delta T = 25\ln(t_c[\mathrm{mm}]/20),\ \Delta T \geqslant 0. \qquad (5.5.9.3\text{-}2)$$

Loading J, in N/mm, shall be determined by the following formula:

$$J = \frac{1000(1-\mu^2)}{E}[(K_1^d)^2 + f_1(K_{1res})^2]f_2. \qquad (5.5.9.3\text{-}3)$$

Functions f_1 and f_2 shall be determined depending on the relative effective stresses $\bar{\sigma}$ in a particular design case by the following formulae:

$$f_1 = 1 - 0{,}67\bar{\sigma}; \qquad (5.5.9.3\text{-}4)$$

$$f_2 = 1 + 13{,}3(\bar{\sigma} - 0{,}5)^{2,7} \text{ for } \bar{\sigma} \geqslant 0{,}5 \text{ and } f_2 = 1 \text{ for } \bar{\sigma} < 0{,}5 \qquad (5.5.9.3\text{-}5)$$

where for the surface semi-elliptic crack

$$\bar{\sigma} = \frac{\sigma_b/3 + \sqrt{\sigma_b^2/9 + \sigma_t^2}}{(1-\varsigma)^{0,42}\sigma_{02}}; \qquad (5.5.9.3\text{-}6)$$

for the elliptic internal crack

$$\bar{\sigma} = \frac{\varsigma\sigma_t + \sigma_b/3 + \sqrt{(\varsigma\sigma_t + \sigma_b/3)^2 + [(1-\varsigma)^2 + 4\varsigma\gamma]\sigma_t^2}}{[(1-\varsigma)^2 + 4\varsigma\gamma]\sigma_{02}},$$

$$h = a/t_c,\ \gamma = 0{,}8 - h; \qquad (5.5.9.3\text{-}7)$$

macrogeometric parameter

$$\varsigma = \frac{al}{t_c(l + 2t_c)}. \qquad (5.5.9.3\text{-}8)$$

The value of stress intensity factor, MPa·$\sqrt{\mathrm{m}}$ at the design defect front at in-service (test, emergency) load shall be determined as follows:

$$K_I^d = (\sigma_t Y_t + \sigma_b Y_b)\sqrt{0{,}001\pi a}. \qquad (5.5.9.3\text{-}9)$$

Values of functions Y_t, Y_b to determine K_1^d shall be taken according to nomographs specified in Figs. 5.5.9.3-1 and 5.5.9.3-2.

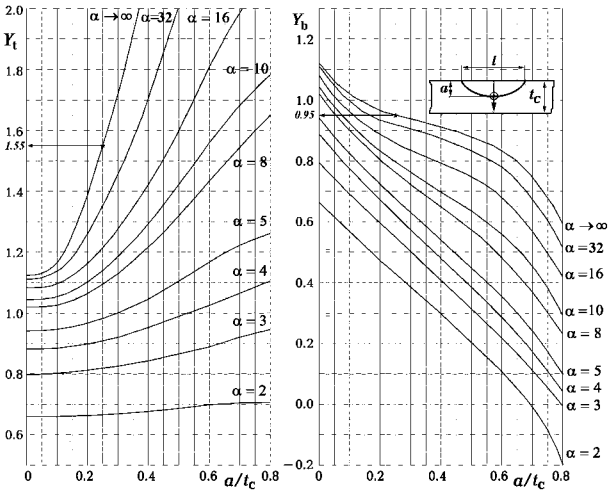

Fig. 5.5.9.3-1
Nomographs for determination
of Y-functions (surface semi-elliptical crack)

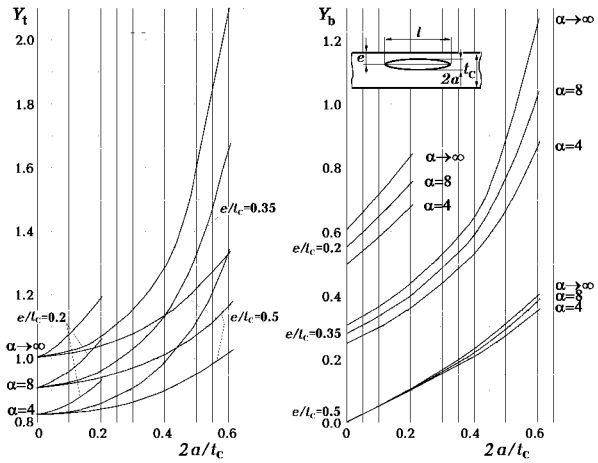

Fig. 5.5.9.3-2
Nomographs for determination
of Y-functions (internal elliptical crack), where $\alpha = l/a$

The design tensile stresses σ_t shall be calculated as an algebraic sum of rated stresses for the design case $\sigma_{t\,nom}$ and residual assembly stresses σ_R, which are taken to be 100 MPa. Design bending stresses σ_b are taken as equal to the rated stresses for the design case $\sigma_{b\,nom}$:

$$\sigma_t = \min(\sigma_{t\ nom} + \sigma_R, \sigma_{02}),\ \sigma_b = \sigma_{b\ nom},\ \sigma_{02} = R_{p\ 0,2}. \quad (5.5.9.3\text{-}10)$$

Stresses $\sigma_{t\,nom}$, $\sigma_{b\,nom}$ shall be calculated according to design documentation with regard to internal pressure within the pipe and bending corresponding to the design case. When $\sigma_{t\,nom}$ or $\sigma_{b\,nom} < 0$, $\sigma_{t\,nom}$ or $\sigma_{b\,nom}$ shall be taken zero.

The value of stress intensity factor at the design defect front under action of the residual stresses during welding of multi-run welded joints, in MPa$\sqrt{\text{m}}$, shall be determined by the formula

$$K_{1res} = \eta\sigma_{02}\sqrt{0{,}001\pi a}\ Y_r Y_a \quad (5.5.9.3\text{-}11)$$

with regard to the following:

for welded joints after welding the value of factor η shall be taken 1,0 at $t_c \geqslant 30$ mm, for less thicknesses

$$\eta = 1 - 0{,}7\left(\frac{10}{t_c}\right)^2; \quad (5.5.9.3\text{-}12)$$

the value of Y_a for the surface semi-elliptical or internal elliptical crack shall be determined by the formula

$$Y_a = \left[1 + 4{,}6\left(\frac{b}{l}\right)^{1,65}\right]^{-1/2} \quad (5.5.9.3\text{-}13)$$

where $b = a$ for the surface crack;
$b = 2a$ for the internal crack.

The value of Y_r shall be determined depending on the design point and type of preparation.

.1 For welded joints made with non-symmetric edge preparation (the outside weld is of greater section, the backing weld is of less section or there is no backing weld):

for fracture from the weld boundary from the reinforcement side, the size h shall be measured from the external surface:

$$Y_r = 1{,}0\exp(-3{,}9h); \quad (5.5.9.3.1\text{-}1)$$

for fracture from the weld boundary from the root side, the size h shall be measured from the internal surface:

$$Y_r = 1{,}1\exp(-8{,}6h); \quad (5.5.9.3.1\text{-}2)$$

for fracture from the internal defect (q — weld root depth, e — distance between the centre of the internal elliptic defect and the surface, $u = (e-a)/q$), sizes h, e, q shall be measured from one side:

$$Y_r = 2{,}0\exp(-4{,}5u)\exp(-3{,}9h). \quad (5.5.9.3.1\text{-}3)$$

When the internal defect depth e is unknown or unspecified, e is considered to be $e = 0{,}2t_c$;

fracture along the weld metal from the weld root (typical for welded joints without backing weld):

$$Y_r = 2{,}4\exp(-6{,}9h). \quad (5.5.9.3.1\text{-}4)$$

For welded joints made with symmetric edge preparation (the section of outside and backing welds is almost the same):

.2 For welded joints formed by symmetrically prepared butt or fillet welds, the fracture along the fusion line and HAZ shall be as follows:

for fracture from the surface, from the weld boundary

$$Y_r = 1{,}6\exp(-8{,}1h); \quad (5.5.9.3.2\text{-}1)$$

for fracture from the internal defect

$$Y_r = 2{,}5\exp(-7u)\exp(-8{,}1h); \quad (5.5.9.3.2\text{-}2)$$

fracture along the weld metal from the weld reinforcement surface

$$Y_r = 79h^2\exp(-8{,}1h). \quad (5.5.9.3.2\text{-}3)$$

The yield stress of the material with crack propagation for the selected design point shall be taken as a yield stress (base metal, weld metal or HAZ, in the latter case, the largest value from values obtained for the base metal and weld metal shall be taken).

6 BALLASTING OF SUBSEA PIPELINES

6.1 GENERAL

6.1.1 Ballasting of the subsea pipeline is required for ensuring positive buoyancy compensation and on bottom stability by creating resistance to current and wave induced horizontal and vertical forces, as well as for ensuring protection against impacts during transportation, installation and operation.

6.1.2 Ballasting of subsea pipelines may be performed using continuous bulk concrete and asphalt concrete coatings applied on the insulation as well as by placing single cast iron, reinforced concrete and concrete weights.

6.1.3 Weight coating for ballasting and mechanical protection of pipelines shall be approved by the Register and comply with the following requirements:

have sufficient density and thickness to provide necessary negative buoyancy to the pipeline;

have sufficient mechanical strength to withstand damage during pipe transportation, installation and operation;

have sufficient durability, chemical and mechanical resistance to the sea water.

6.1.4 Split hinged or split saddle-shaped weights made of cast iron and reinforced concrete as well as other constructions approved by the Register may be used as single weights.

6.1.5 Pipeline weight including weight of the pipes, insulation, weight coating, if any, weights, etc. shall ensure the weight force sufficient for creating negative buoyancy to the pipeline. The value of this force shall be equal to the difference between the pipeline weight with all components and coatings in the air, and the weight of the water displaced by the pipeline.

6.1.6 Calculation of ballasting for the subsea pipeline shall be made as for the empty pipeline irrespective of the purpose (type of the conveyed medium) and environmental conditions in the area of the pipeline route. Weight of the transported medium is neglected, and the pipe weight does not consider the wall thickness allowance for corrosion.

See Circular 1216

6.1.7 Calculation of the ballast required and spacing between the single ballast weights for the pipelines non-buried into the seabed soil shall be made based on the conditions for creating negative buoyancy to the pipeline, wave and current induced displacement resistance, as well as taking into account vertical forces occurring in curved sections of the pipeline. The required weight of submerged ballast Q_b, in kN/m, shall be determined by the formula

$$Q_b \geqslant \frac{F_g}{f_{fr}} k_{st} + (F_v + q_u + q_s)\, k - Q_p \qquad (6.1.7)$$

where F_g = total horizontal component of force action of waves and current determined in accordance with 2.5 and 2.6, in kN/m;

F_v = total vertical component of wave- and current induced force determined in accordance with 2.5 and 2.6, in kN/m;

f_{fr} = friction coefficient or ttgφ, where φ — the smallest angle of soil internal friction along the pipeline route on sections where wave and current induced force is the biggest;

k_e = pipeline floating-up stability factor taken equal to 1,15 for pipelines of classes **L**, **LI** and **G**, **G1**; 1,2 for classes **L2** and **G2**; 1,25 for classes **L3** and **G3**;

k_{st} = pipeline shear stability factor taken equal to 1,1 for pipelines of classes **L**, **LI** and **G**, **G1**; 1,2 for classes **L2** and **G2**; 1,3 for classes **L3** and **G3**;

q_u = vertical force occurring during elastic bending of pipelines in the vertical plane, in kN/m;

q_s = vertical force occurring during lateral tensile pull in the curved pipeline, in kN/m;

Q_p = submerged pipe weight per unit length considering the weight of the corrosion protection and insulation (without weight of the transported medium and the wall thickness allowance for corrosion), in kH/m.

Values of q_u and q_s shall be determined by the procedure agreed with the Register taking into account parameters of subsea pipeline route section (length and camber of the pipeline elastic deflection).

6.1.8 Where there are weak strength properties of the seabed soil along the pipeleine route or soil prone to liquefaction, the floating-up or immersion stabillity shall be confirmed.

The floating-up stability of the pipeline buried into the seabed soil shall be provided with the certain thickness of the overlying soil layer considering its residual shear strength.

In order to determine the pipeline weight (buoyancy) in the liquefied seabed soil with no shear strength, liquefied seabed soil density (soil particles plus water weight to volume ratio) shall be determined on the basis of engineering survey data such as soil skeleton density, soil moisture and water density.

6.2 CONTINUOUS WEIGHT COATINGS

6.2.1 General.

6.2.1.1 Design, calculation of principal parameters and application procedure of continuous concrete weight coating shall be based on the national state and branch standards, international standards related to concrete structures, such as ISO 21809-5, EN 1992-1 Eurocode 2, EN 10080.

6.2.1.2 Initial parameters for the continuous weight coating are the following:

specific weight/weight in water;

coating thickness;

density;

compressive strength;
water absorption;
impact resistance;
bending and shear resistance.

6.2.1.3 The minimum thickness of the continuous coating shall be not less than 40 mm.

6.2.2 Raw materials for concrete manufacture.

6.2.2.1 Properties and technical characteristics of raw materials for coating (cement, aggregates, reinforcement, water, etc.) shall comply with a performance specification, passport data and purchase specification.

See Circular 1216

6.2.2.2 Cement of domestic grades not less than 400 according to GOST 10178-85 and GOST 31108-2003, as well as similar cement grades meeting the requirements of EN 197, BS 12, ASTM C 150, DIN 1164 or other national and international standards may be used for the concrete coating on agreement with the Register.

See Circular 1216

6.2.2.3 Concrete aggregates shall comply with the requirements of the national standards or regulations used in manufacture of the continuous concrete coatings.

The aggregates shall not contain harmful constituents in such quantities that could affect the concrete strength, for example, in pipeline bending or cause corrosion of reinforcing materials in case of water permeability of the concrete.

Use of aggregates with alkali-sensitive constituents is forbidden.

The maximum grain size and grading[1] curve of the aggregate shall comply with EN 206, ASTM C 33 or other standards.

The maximum grain size of gravel, iron or barium ore used as aggregates shall not exceed 10 mm.

6.2.2.4 Water for mixing concrete shall not contain harmful constituents in such quantities that could impair concrete curing, stiffening and strength or cause corrosion of reinforcing materials. Water for concrete mixing shall comply with the requirements of ASTM C 1602, EN 1008 or GOST 23732.

6.2.3 Reinforced concrete coating.

6.2.3.1 Composition of the concrete, aggregate and water (refer to 6.2.2.1 to 6.2.2.4) shall be such that all the requirements for properties of stiffened and cured concrete, including its consistency, bulk density, strength and durability, as well as reinforcement protection against corrosion, shall be met.

Concrete shall comply with the following requirements:
minimum bulk density after curing shall be 2200 kg/m^3;
water absorption by weight shall not exceed 5 %;
durability at the operating temperature shall be equal to the operational life of the subsea pipeline;
minimum compressive strength in a month after curing — 40 MPa.

Concrete compressive strength shall be determined at testing of check specimens taken from the batches and cut out directly from the concrete coating in accordance with the requirements of EN 206, ASTM C39, ASTM C 42, BS 1881, BS 4019, BS 6089 or the national standards on agreement with the Register.

6.2.3.2 Steel reinforcement for the concrete coating shall consist of cylindrical cages manufactured by resistance welding of longitudinal and hooped mild steel reinforcement or other reinforcement as required by the procedure approved by the Register. Steel reinforcement may also be applied in the form of wire mesh (steeled or woven) which includes helicalically woven stripes (helical mesh) reinforcement.

Diameter, surface condition, strength characteristics and marking of steel reinforcements shall comply with the requirements of international and national standards (e.g., EN 10080, BS 4482 and BS 4483, DIN 488).

Recommendations on size and setting of steel reinforcements are specified in Table 6.2.3.2-1.

The bars for the values shaped like a welded cage shall be not less than 5 mm in diameter. The maximum spacing between hooped bars is 120 mm. The minimum ratio between cross-sectional area of longitudual and hooped reinforcement to the concrete coating area shall be 0,08 % and 0,5 % respectively.

If a helical reinforcing mesh is used, the required number of layers depends on the concrete thickness and is determined according to Table 6.2.3.2-2.

6.2.3.3 Contact of the reinforcement steel cages/meshes of the concrete weight coating with a protector or a steel pipe.

Table 6.2.3.2-1

Recommended diameters of reinforcement

Geometrical parameters	Longitudinal reinforcement	Hooped reinforcement	Reinforcement type
Bar diameter, in mm Bar distance (spacing), in mm Relation between cross-sectional area of reinforcement to the concrete coating area, %	5 — 8 75 — 300 0,08 — 0,2	5 — 12 75 — 120 0,5 — 1,0	Welded cage
Bar diameter, in mm Bar distance (spacing), in mm Relation between cross-sectional area of reinforcement to the concrete coating area, %	1,5 — 4 50 — 200 min. 0,08	1,5 — 4 25 — 100 min. 0,5	Welded wire mesh
Note. Alternative reinforcement materials, such as glass fiber may be used if they provide equivalent effective reinforcing.			

[1] Grading, gram-size analysis means the combination of methods for measurement of gram sizes in various media.

Table 6.2.3.2-2

Recommended number of layers of helical reinforcing mesh

Concrete thickness, in mm	Number of layers
< 60	1
61 — 100	2
101 — 140	3
> 140	4

The minimum distance from the reinforcement steel cage/mesh of the concrete weight coating to corrosion-protection coating of the pipe shall be equal to 15 mm. The minimum thickness of the concrete layer above the reinforcement cage/mesh shall be the same.

6.2.4 Composite coatings.

6.2.4.1 Upon agreement with the Register, asphalt- or bitumen-based coatings may be used as weight coatings of the subsea pipelines.

6.2.4.2 In an asphalt mastic-based weight coating use may be made of the aggregates in the form of glass fiber and heavy-weight particles. The volume weight of such coatings shall be not less than 2,5 t/m^3.

6.2.4.3 An asphalt mastic-based weight coating shall be applied on the pipeline surface in hot state at temperature not higher than 140 °C. Upon application of the compound a layer of glass reinforced plastic is wound thereon, then the coating is pressed with pneumatic hammers and cooled down to the ambient temperature.

7 CORROSION PROTECTION

7.1 GENERAL

7.1.1 The steel subsea pipelines are subject to combined corrosion protection by both protective coatings and electrochemical protection devices. Corrosion protection of subsea pipelines shall provide their fault-free operation (for this reason) during the whole service life.

7.1.2 Protection of the steel subsea pipelines shall comply with the international and/or national standards, firm standards and technical documentation approved by the Register.

7.1.3 Corrosion-protection coatings shall be applied on all the external and, where required, internal surfaces of the pipes of the subsea pipeline, in factory conditions and under the RS technical supervision.

7.1.4 The type of protective coating shall be selected depending on the pipeline structure, laying method used and operating conditions, transported medium and temperature limitations for insulating coatings in operation, during storage and transportation.

7.1.5 Insulation of the welded joints of pipes, spool pieces, bends and subsea fittings shall be similar to insulation of the pipeline linear section.

7.1.6 Insulation shall be applied on the steel pipes, bends and subsea fittings in factory conditions and under the RS technical supervision.

7.1.7 Special arrangements shall be made to prevent mechanical damages of the protective insulating coating during transportation, handling operations and storage of pipes. Influence of possible low temperatures on the insulating coatings shall be considered during transportation and storage, and, where required, frost-resistant coatings shall be selected.

7.1.8 Metal components of flexible subsea pipelines in contact with sea water (connecting steel fittings) shall be protected against the external corrosion by combined protection including protective coatings and electrochemical protection.

7.2 PROTECTION AGAINST INTERNAL CORROSION

7.2.1 A necessity of introduction of the corrosion allowance and its value is specified in design documentation for subsea pipelines and shall be approved by the Register.

The minimum corrosion allowance for carbon steel pipelines conveying non-aggressive media shall be not less than **1** mm. For the pipelines conveying corrosive media, corrosive allowance shall be minimum **3** mm.

7.2.2 A necessity of applying internal corrosion-protection or anti-friction coating on pipes shall be specified in design documentation depending on the transported medium parameters.

7.2.3 The internal corrosion-protection coating shall provide protection of the pipe steel surface against corrosive and erosive effects of the transported medium as well as protection of the steel pipe internal surface against atmospheric corrosion during storage and transportation.

7.2.4 Anti-friction coating shall provide the necessary roughness of the pipeline internal surface to reduce hydraulic resistance to transported gas and to protect the pipe internal surface against atmospheric corrosion during transportation and storage.

7.2.5 The internal corrosion-protection coating may consist of one or more layers. Anti-friction coating, as a rule, shall have one layer only.

7.2.6 Epoxy or modified epoxy coating materials shall be used for the internal corrosion-protection coating. Other types of corrosion-protection coatings, including powder epoxy coatings, can be also used.

7.2.7 Epoxy or modified epoxy coating materials shall be used for the internal anti-friction coating.

7.2.8 The coatings shall withstand environmental and transported medium exposure without delaminations, cracks or discontinuities. Where necessary, the permissible storage temperatures for the pipes with the applied coatings shall be also considered.

7.2.9 Materials to be used shall have quality certificates for each batch indicating the manufacturer of material, name (type) of material, date of manufacture and service life.

7.2.10 All the materials shall be subject to incoming inspection, including check of the support documentation, inspection of shipping containers, determination of storage time and conditions.

7.2.11 The specifications for the pipe corrosion-protection or anti-friction coating shall contain the manufacturer requirements to the surface preparation prior to applying the coating (including purity, salt content, dust removal efficiency, roughness), the minimum and maximum coating thickness, drying conditions and curing behaviour.

7.2.12 The minimum permissible roughness and thickness approved by the Register shall be specified for the anti-friction coatings.

7.2.13 The minimum permissible thickness approved by the Register shall be specified for the corrosion-protection coatings.

7.2.14 Internal corrosion-protection coatings are subject to type approval by the Register where tests

shall be carried out to confirm compliance of the following coating parameters with the documentation approved by the Register:

appearance;
thickness;
holiday detection;
adhesion;
impact indirect strength;
resistance to abrasion;
resistance to temperature differences;
resistance to rapid decompression (blistering);
resistance to the transported medium and autoclave test.

7.2.15 The tests specified in **7.2.14** shall be generally carried out at the temperatures corresponding to the minimum and maximum coating operating temperatures.

7.2.16 During the RS technical supervision for application of internal corrosion-protection coatings, at least the following parameters shall be to checked:

appearance;
thickness;
holiday detection;
adhesion.

7.2.17 Anti-friction coatings are subject to type approval by the Register where tests shall be carried out to confirm compliance of the following coating parameters with the documentation approved by the Register:

appearance, including roughness;
thickness;
holiday detection;
adhesion;
bending strength;
hardness;
resistance to rapid decompression (blistering);
resistance to the transported medium and autoclave test;
resistance to abrasion.

7.2.18 The tests specified in **7.2.17** shall be generally carried out at the temperatures corresponding to the minimum and maximum coating operating temperatures.

7.2.19 During the RS technical supervision of the Register for application of internal anti-friction coatings, at least the following parameters shall be subject to check:

appearance, including roughness;
thickness;
holiday detection;
adhesion.

7.3 PROTECTION AGAINST EXTERNAL CORROSION

7.3.1 Coatings. General.

7.3.1.1 In order to protect the subsea pipeline against external corrosion it shall have a factory-applied corrosion-protection coating approved by the Register. Where necessary, the external coating shall have an outside layer for protection against mechanical damage during tie-in operations and laying in/on hard seabed.

7.3.1.2 The external coating shall comply with the international and/or national standards, firm standards, technical documentation approved by the Register and requirements of this Section.

7.3.1.3 Polyethylene (PE) coatings shall be selected for operating temperatures of −40 °C to + 60 °C. Polypropylene (PP) coatings shall be selected for operating temperatures of −20 °C to +110 °C. The permissible storage and shipping temperatures for the pipes with the applied coatings shall be also considered, where necessary.

7.3.1.4 The external corrosion-protection coating shall be compatible with cathodic protection and maintain its protective properties at protection potentials up to −1,10 V.

7.3.1.5 The coating materials shall comply with the normative documents and provide external coating of the pipes complying with the international and/or national standards, firm standards and technical documentation approved by the Register.

7.3.1.6 Compliance of the coating materials with technical requirements of the normative documents shall be confirmed by a quality certificate and incoming inspection at the firm where the coating is applied.

7.3.1.7 Marking of the material shall include the following:

name;
mark;
batch number;
date of manufacture.

7.3.1.8 The PE or PP coating shall consist of the following:

adhesive sublayer (primer) based on the epoxy powder/liquid paints (may be omitted for pipes with diameter up to 800 mm with PE coating);

bonding interlayer based on hot-melt polymeric compounds;

PE/PP outer layer;

Thickness of each layer shall be specified in the technical documentation.

7.3.1.9 External corrosion-protection coatings are subject to type approval by the Register where tests shall be carried out to confirm compliance of the following coating parameters with the documentation approved by the Register:

appearance;
thickness;
holiday detection;
impact strength;
adhesion;
cathodic disbondment;
indentation resistance;

cracking resistance;
elongation at break;
heat cycling resistance.

7.3.1.10 The tests specified in **7.3.1**.9 shall be generally carried out at the temperatures corresponding to the minimum and maximum coating operating temperatures.

7.3.1.11 During the RS technical supervision for application of the external corrosion-protection coatings, at least the following coating parameters shall be checked:
appearance;
thickness;
holiday detection;
adhesion.

7.3.1.12 The external coating shall be compatible with concrete coating, if any. In this case, the coating surface layer shall be made rough with the use of sinter powder.

7.3.1.13 The manufacturing specification for coating subject to the RS approval shall specify the following:
coating material (specifications for materials, including certificates for material property tests);
surface preparation (manufacturer's technical requirements to cleaning, salt content and roughness);
coating application (application process, including main parameters such as: air temperature and relative humidity, pipe surface temperature, application time, coating layer thickness, material consumption, time of the coating layer drying and its total conditioning depending on the air temperature, etc.);
inspection and testing (specification for the coating to be applied, including test certificates);
coating repairing process;
guidelines and instructions on transportation and storage of pipes.

7.3.2 Special coatings for standpipes and shore approach.

7.3.2.1 Reinforced three-layer PE or PP coatings shall be used for standpipes and shore approach to protect against the splash, atmospheric and underwater corrosion. They shall be resistont to ultra-violet irradiation and low temperature.

7.3.2.2 Corrosion-protection coatings shall be protected against mechanical damage caused by ice or floating items. In other cases, the requirements of **7.3.1** shall be met.

7.3.3 Field joint coatings.

7.3.3.1 Corrosion-protection coating applied on butt-welded joints shall be as much as possible equal to, and compatible with the pipe main coating, thus providing equal protective performance for the whole pipeline.

7.3.3.2 When selecting and using materials for corrosion protection of the pipe joints, the requirements of ISO **21809-3** as well as industrial normative documents and firm standards shall be met. Technical documentation for field joint coatings shall be approved by the Register.

7.3.3.3 When selecting the coating type for the welded joint area, the following shall be considered:
compatibility with electrochemical protection (cathodic or impressed-current type);
maximum operating temperature of the field joint coating;
required field joint cleanliness to install sleeve;
coating thickness;
duration of works and necessity in auxiliary operations (heating, edge cutting, etc.);
availability of a coating repair kit.

7.3.3.4 The maximum field joint coating operating temperature shall be higher than the pipe operating temperature.

7.3.3.5 The field joints may be protected with heat-shrink sleeves. The RS technical supervision during manufacture of the heat-shrink sleeves shall comply with **2.7.2** of the SP Guidelines.

7.3.3.6 Heat-shrink sleeves shall be compatible with the electrochemical protection system used and shall remain intact at protection potentials of **−1,10** V.

7.3.3.7 The heat-shrink sleeves shall be made of a two-layer material consisting of a polyolefin base film and a hot-melt adhesive with high adhesion to steel pipes and factory coating. Sleeves which hot-melt adhesive softens at high temperatures shall be normally applied on the welds areas above an epoxy primer. The primer shall not contain solvents.

7.3.3.8 Structure of the coating on the weld joint based on heat-shrink sleeves shall have the protective properties similar to the factory corrosion-protection coating of the pipes and provide durable adhesion.

7.3.3.9 The corrosion-protection coating on pipe weld joints shall be protected against mechanical impact during pipeline laying and in operation, including the pipeline burial into the seabed soil, by using protective casings and/or applying polymeric in-fills in the space between the weight and thermal insulating coatings of the adjacent pipes.

7.3.3.10 To protect the heat-shrink sleeves against mechanical impact during pipeline laying and burial, protective sheet polymeric (usually polyurethane (PU) or PP) "rock shields" may be wrapped around and attached to the pipe where the sleeves are installed, except those specified in **7.3.3**.9.

7.3.3.11 The RS technical supervision during manufacture of the rock shields subject to type approval by the Register shall comply with **2.7.4** of the SP Guidelines. During approval of the rock shields by the Register with respect for the operating temperature range, at least the following properties shall be verified (for one-layer version):
impact resistance;
tensile strength and elongation;
sea water resistance;
resistance to abrasion.

7.3.3.12 Upon agreement with the Register, in order to protect the pipe butt-welded joints, other structures and materials complying with **7.3.3.1**, **7.3.3.3**, **7.3.3.4** and 7.3.3.9 may be used.

7.3.3.13 All materials used on the field joints, application procedure and quality control shall be approved by the Register.

7.4 ELECTROCHEMICAL PROTECTION

7.4.1 General.

7.4.1.1 The subsea pipelines shall be protected against corrosive wear by electrochemical protection together with corrosion-protection coating according to 7.3.1.4.

7.4.1.2 Electrochemical protection of the subsea pipelines shall be provided according to ISO **15589-2**, national and industrial standards, requirements of this Section and documentation approved by the Register.

7.4.1.3 The basic requirements for the electrochemical protection system are the following:

prevention of external corrosion during the whole service life of a pipeline;

generation/supply of electric current with sufficient density to the pipeline to be protected and the current efficient distribution according to the design parameters;

setting of anodes to minimize their possible damage or destruction;

provision of necessary monitoring equipment to test and evaluate the protection system performance.

7.4.1.4 Electrochemical protection system shall be designed based on pipeline laying method, structural features of the pipeline/standpipe, seabed soil features, sea water parameters, and pipeline division into sections which require different electrochemical protection parameters (e.g., sections near fixed offshore platforms).

7.4.1.5 The electrochemical protection system shall be designed for a service life normally equal to design pipeline service life.

7.4.1.6 Electrochemical protection may be provided in the form of galvanic anodes (sacrificial anodes) or impressed-current protection system (cathodic protection). Selected electrochemical protection system shall be agreed upon with the Register, which shall be provided with justification on selection of the electrochemical protection system – impressed-current protection system or galvanic anode system – and their design parameters.

7.4.1.7 During design of the electrochemical protection system for the pipeline the following shall be considered:

.1 structural parameters of the pipeline to be protected, including:

material, length, wall thickness, outside diameter;

laying method, route, pipeline routing conditions, pipeline connections (spool pieces);

temperature conditions (in operation and during shutdown) along its whole length;

type and thickness of corrosion-protection coatings for the pipes (bends and fittings);

type and thickness of thermal insulation (if any);

type and thickness of weight coating (if any);

.2 environmental conditions:

sea water parameters, including resistivity depending on temperature/depth, current velocities, oxygen content, suspended solid particles, etc.;

soil resistivity.

.3 system design life;

.4 information on existing pipelines located in close proximity to or crossing a new pipeline;

.5 information on existing electrochemical protection systems (platforms, quays, etc.) and pipeline electric insulation;

.6 available power source, electrical isolating devices, electrical connections;

.7 construction schedule, planned date of commissioning;

.8 available spool pieces, fittings, bends, standpipes, etc.;

.9 performance data on the electrochemical protection systems used in the similar environment.

7.4.1.8 For electrochemical protection of the subsea pipelines, values of the protection potentials are specified in Table **7.1.4.8** for the silver chloride reference electrode (Ag/AgCl/sea water). These criteria are applicable to the impressed-current and galvanic anode systems.

7.4.1.9 The values specified in Table **7.4.1.8** correspond to an average salinity of 3,5 % and specific resistivity of 30 Ohm·cm. If water resistivity and salinity deviate from the said values or other reference electrodes are used, the required protection potentials may be determined according to ISO **15589-2**.

7.4.1.10 The design life (design service life) of the electrochemical protection system shall include the period from installation to completion of the pipeline operation.

7.4.1.11 Design current density depends on sea water temperature, oxygen content, sea water flow velocity and uncoated metal surfaces calcification rate. For most applications at the depths less than 500 m, design current density depending on sea water temperature may be determined according to ISO **15589-2**.

7.4.1.12 For the pipelines/standpipes in splash area, the current density shall be set **10** mA/m^2 higher than for the same pipeline/standpipe under water below the intermittent wetting area (for the same temperature).

7.4.1.13 For the non-buried pipelines subject to strong flows or waves with water particle velocities $\geqslant$**2** m/s, the design current density shall be increased by **60** to **100** mA/m^2.

Table 7.4.1.8

Recommended Criteria for Protection Potential of Electrochemical Protection Systems

Material	Minimum negative potential, in V	Maximum negative potential, in V
Carbon steel:		
aerobic environment	−0,80	−1,10[1]
anaerobic environment	−0,90	−1,10[1]
Austenitic stainless steel:		
$N_{PRE} \geq 40$[2]	−0,30[3]	−1,10
$N_{PRE} < 40$[2]	−0,50[3]	−1,10
Duplex stainless steel	−0,50[3]	[4]
Martensitic stainless steel (13% Cr)	−0,50[3]	[4]

[1]For the pipelines manufactured from high-strength steel (R_e > 550 MPa), the maximum negative potential that the metal can withstand without hydrogen embrittlement shall be determined.

[2]Pitting corrosion resistance factor N_{PRE} = Cr % + 3,3(Mo + 0,5W) % + 16N %.

[3]For corrosion-resistant steels, the minimum negative potentials are used for both aerobic and anaerobic conditions.

4 Depending on strength class, supply condition and mechanical stressing in operation, the steels can be subject to hydrogen embrittlement. When a risk of hydrogen embrittlement exists, the potentials more negative than −0,8 V shall be avoided.

Notes: 1. The potentials given in the Table apply to saline mud and sea water of usual composition (salinity of 3,2 to 3,8 %).
2. The potentials are related to the silver chloride reference electrode (Ag/AgCl/sea water) in sea water with resistance of 30 Ohm·cm.

7.4.1.14 For the pipelines completely buried into the seabed soil, the design current density (both average and end values) shall be used equal to **20** mA/m^2, irrespective of the sea water temperature or depth.

7.4.1.15 The pipelines operating with higher (above 50 °C) temperatures of the pipe external surface increase by **1** degree Celsius of the design current density. Every increase by **1** degree Celsius of metal/environment above 50 °C requires additional **1** mA/m^2 of the design current density. Higher temperatures can also deteriorate performance of the anode and pipeline coatings. Special assessment of the current density is recommended for the pipe external surface temperatures above **80** °C.

7.4.1.16 The above said current densities are also applicable to electrochemical protection of uncoated stainless steels (austenitic, martensitic or duplex) of any type.

7.4.1.17 Sufficient power for electrochemical protection shall be provided to maintain protection performance as the coating deteriorates and to compensate for the current distribution irregularities. The coating deterioration shall be recorded according to the international and/or national standards.

7.4.1.18 Monitoring of the electrochemical protection system performance is recommended by connecting underwater cables at maximum 5,0 km interval to the pipeline and use of special purpose monitoring systems. Cable welding/soldering and water insulation shall be approved by the Register.

For long pipelines, it is recommended to install on the pipeline (especially on the sections where unstable electrochemical protection performance is anticipated) the underwater instruments with self-contained power supply and sonar communication channel with shore-based or ship-based monitoring stations according to the documentation approved by the Register.

7.4.1.19 Prior to commencement of the pipeline operation, procedure for the electrochemical protection system performance monitoring as a component of operation regulations subject to approval by the Register shall be developed.

7.4.2 Cathodic protection systems (impressed-current electrochemical protection systems) for subsea pipeline.

7.4.2.1 The technical documentation on cathodic protection submitted to the Register for approval shall include the following:

layout of the cathodic protection stations, including location of all test points;

specifications of all the necessary equipment, including converters/transformers, electrical cables and their protective devices, anodes, etc.;

specifications for the system installation;

specifications for start-up and acceptance tests;

operating and maintenance instructions.

The impressed-current electrochemical protection systems are subject to type approval by the Register; installation and testing of the cathodic protection system are subject to the RS technical supervision.

7.4.2.2 Generally, the subsea pipeline shall be provided with a separate cathodic protection unit, irrespective of availability of similar systems to protect other offshore structures (platforms, quays, etc.). Supply from a common converter of sufficient power using a dedicated cable and respective shutdown and monitoring systems is allowed.

The cable line from the converter shall be connected to the pipeline in two points, the main and standby ones.

7.4.2.3 The cathodic protection systems of the subsea pipelines may be provided with one or two cathodic protection stations located on one or both ends of the pipeline.

Pipe-in-pipe casings of the shore approaches made applying the horizontal directional drilling method are subject to mandatory cathodic protection.

7.4.2.4 Use of the polarization potential self-regulation mode in the cathodic protection system is recommended to protect the subsea pipelines against the earth current. Automatic control shall be based on the readings of the potentials from the stationary reference electrodes.

7.4.2.5 To avoid possible hydrogen cracking and corrosion fatigue of the main metal and welds (especially for high-strength steel with a high level of mechanical stress), a negative limit of the protection potential shall be determined and maintained.

7.4.2.6 When using cathodic protection for the subsea pipelines, an adequate electrical insulation shall be provided from the adjacent structures (pipelines/ standpipes of a platform, quay, etc.) and other sections of the pipeline provided with galvanic anode protection.

7.4.2.7 The following current density values shall be determined:

initial, for pipeline polarization at commissioning of the cathodic protection system;

average, as required to maintain polarization;

final, by the end of the pipeline service life.

The cathodic protection system allows adjusting current density depending on state of the subsea pipeline surface and external conditions.

7.4.2.8 Use of the mixed metal oxides or titanium, columbic or tantalum plates on a base, as anode material is recommended. In some cases, upon agreement with the Register, other materials confirmed by certification tests carried out by the firms/laboratories recognized by the Register may be used.

7.4.2.9 The maximum operating voltage and density of anode current are determined depending on the material of anode and base as well as operation design period of the system.

Current output from individual anodes shall be adjusted independently. Calculation of the impressed current electrochemical protection system shall provide redundancy as regards anode quantity.

7.4.2.10 Anodes of the cathodic protection system shall be buried into the shore or laid on the bottom according to the technical documentation approved by the Register. The anodes shall be designed to withstand all operating loads and installation loads, including those during their replacement from the surface, by divers or using underwater vehicles.

7.4.2.11 When using an impressed-current system, the stationary reference electrodes shall be installed to confirm efficiency of the pipeline electrochemical protection:

silver-silver chloride/sea water (Ag/AgCl/sea water), refer to **7.4.1.8**;

saturated calomel electrode;

high-purity zinc electrode.

Portable reference electrodes may be used; however, the critical route sections where control by divers or underwater vehicles is not possible shall be mandatory equipped with the stationary reference electrodes.

7.4.2.12 Maintenance and calibration methods shall be developed for the stationary reference electrodes during the pipeline operation.

7.4.2.13 The cables connected to the positive and negative terminals of the cathodic protection components shall not be laid in one cable casing.

7.4.2.14 Unless otherwise specified in the documentation approved by the Register, the electrochemical cathodic protection shall be put into operation not later than 30 days upon completion of the subsea pipeline laying.

7.4.3 Galvanic anode protection.

7.4.3.1 Parameters of galvanic (sacrificial) anode protection shall be determined in the pipeline design documentation approved by the Register and provide the protection current sufficient for generation of the required protection potentials during the pipeline design life.

7.4.3.2 Technical documentation on the galvanic anode protection system submitted to the Register for approval shall include the following:

specifications and drawings of the galvanic anodes;

electrochemical test results of the galvanic anodes (electrochemical capacity in sea water, change of closed circuit potential in sea water) at the operating temperatures;

calculation of mass and number of the galvanic anodes depending on the pipeline design life;

calculation of the galvanic anode resistance;

calculation of the area to be protected and protection current;

technical documentation for installation, fastening and control over installation of the galvanic anodes.

7.4.3.3 The calculation procedure shall be submitted to the Register for approval. This procedure shall confirm that the galvanic anodes generate the required design current density on the pipeline.

The design values of the galvanic anode parameters shall comply with ISO 15589-2 and are specified in Table **7.4.3.3**.

7.4.3.4 The galvanic anodes shall be located to keep the proper protection in case of mechanical or electrical failure of a single galvanic anode. Distance between the sacrificial anodes of more than 300 m shall be validated by the calculations and agreed upon with the Register.

7.4.3.5 As a rule, the galvanic anode protection system consists of the bracelet anodes equally spaced along the pipeline. Where substantiated, different intervals shall be used for installing galvanic anodes for different sections of the pipeline (end or initial sections, spool pieces, etc.), including:

on the 1000 m portion of the pipeline near FOP it is recommended to use the double amount of galvanic anodes;

it is recommended to provide electrical insulation of the pipeline from other pipelines and facilites.

7.4.3.6 It is recommended to calculate the demanded protection current according to the requirements of

Table 7.4.3.3

Design parameters for galvanic anodes

See Circular 1216

Anode type	Anode surface temperature[1], in°C	Anode immersed in sea water		Anode buried into seabed soil	
		Potential Ag/AgCl/ sea water, in mV	Electrochemical capacity ε, in A·h/kg	Potential Ag/AgCl/ sea water, in mV	Electrochemical capacity ε, in A·h/kg
Aluminium	⩽30 60 80[2]	−1 050 −1 050 −1 000	2 500 2 000 900	−1 000 −1 000 −1 000	2 000 850 400
Zinc	⩽30 ⩽30 — 50[3]	−1 030	780	−980 −980	750 580

[1]For the anode surface temperature between the set limits, current capacity shall be interpolated.
[2]For aluminium anodes, the anode surface temperature shall not exceed 80 °C, unless satisfactory performance is tested and documented.
[3]For zinc anodes, the anode surface temperature shall not exceed 50 °C, unless satisfactory performance is demonstrated in the tests and documented

Notes: 1. Electrochemical capacity for this alloy is a function of temperature and the anode current density.
2. For the non-buried pipelines, the anode surface temperature shall be taken as the pipeline external temperature.

the international and/or national standards. The average (I_{cm}) and end (I_{cf}) demanded current shall be determined, based on the pipeline parameters and selected coating, by the following formula:

$$I_c = A_c f_c i_c \qquad (7.4.3.6)$$

where I_c = demanded protection current for the specific pipeline section, in A;
i_c = current density selected for the average and end conditions, in A/m^2;
f_c = coating damage ratio calculated for the average and end conditions;
A_c = total surface area for specific pipeline section, in m^2.

7.4.3.7 Selection of the galvanic anode type and parameters shall be determined by manufacturing, installation and operation considerations. The galvanic anode dimensions shall be sufficient to provide the required protection current till completion of the pipeline design life.

7.4.3.8 The total net weight of the galvanic anode required to maintain cathodic protection during the pipeline design life shall be determined for each pipeline section by the following formula:

$$m = I_{cm} t_{dl} \frac{8760}{u\varepsilon} \qquad (7.4.3.8)$$

where m = total net weight of the sacrificial anode for specific pipeline section, in kg;
I_{cm} = average demanded current for specific pipeline section, in A;
t_{dl} = design life, in years;
ε = electrochemical capacity of the sacrificial anode material, in A·h/kg;
u = usage factor.

7.4.3.9 For the selected type of the galvanic anodes, their number, dimensions and net weight shall be determined to meet the calculated average and end demanded current to protect the pipeline. Total weight of the galvanic anodes is determined by the following formula:

$$m = n m_a \qquad (7.4.3.9)$$

where n = number of the galvanic anodes to be installed on a specific pipeline section;
m = total net weight of the galvanic anodes for specific pipeline section, in kg;
m_a = net weight of single galvanic anode, in kg.

7.4.3.10 The number of the sacrificial anodes shall be determined by calculations and limited by the maximum permissible distance between the galvanic anodes (refer to **7.4.3.4**). For the bracelet anodes, distance between the galvanic anodes is usually set according to the known number of field joints (pipes).

7.4.3.11 When selecting materials for the galvanic anodes, the following shall be considered:

operating conditions of the galvanic anode immersed in sea water, seabed soil or saline mud;

design theoretical ampere-hour efficiency of the galvanic anode;

required value of the pipeline protection potential;

pipeline/galvanic anode design life;

temperature of the environment, pipe walls and galvanic anodes.

7.4.3.12 When selecting the galvanic anode material, the following shall be also considered:

galvanic anodes of aluminium alloys decrease the electrochemical efficiency at higher temperatures;

burial into the seabed soil may affect some aluminium alloys, especially when the current output is low;

at temperatures exceeding 50 °C performance of zinc galvanic anodes may decrease.

Aluminium or zinc alloys are generally used for galvanic anode protection of the subsea pipelines.

7.4.3.13 Bracelet anodes shall be designed to provide usage factor of minimum 0,80. Shorted galvanic anodes shall have usage factor of at least 0,90.

7.4.3.14 Test results of the galvanic anode mechanical and electrical properties shall be submitted to the Register. The recommended values of the galvanic anode electrochemical parameters are given in Table **7.4.3.14**.

Table 7.4.3.14

Recommended values of galvanic anode electrochemical parameters

Type of galvanic anode	Average current capacity, min, in A·h/kg	Potential of the closed circuit, in mV (Ag/AgCl/sea water)
Aluminium	2600	−1050
Zinc	780	−1030

7.4.3.15 The galvanic anode dimensions shall be determined by the applicable pipe diameter and coating thickness. For the thermally insulated pipelines, the galvanic anodes shall be installed to avoid their heating, as far as possible.

7.4.3.16 It is recommended to select outside diameter of the bracelet anodes equal to the pipeline diameter, including weight coating and/or thermal insulation. When selecting the band anode outside diameter exceeding the pipeline diameter, including weight coating and/or thermal insulation, the side surfaces of the bracelet anodes shall be made in the form of truncated cone.

7.4.3.17 The bracelet anodes shall have corrosion-protection coating on their non-working surfaces. This coating shall be made of two-component epoxy compound with the minimum thickness 100 μm.

7.4.3.18 Quality control of the galvanic anodes shall comply with **2.7.3.2** of the SP Guidelines. The number and selection methods for the galvanic anodes for destructive tests shall be agreed upon with the Register.

7.4.3.19 The tests aimed at electrochemical quality control of the selected galvanic anode material shall include the following:

evaluation of the closed circuit potential;

evaluation of electrochemical capacity.

The specified tests shall be carried out for each batch or for every 15 t of the manufactured galvanic anodes, whichever is less, in the laboratory recognized by the Register or under the RS technical supervision.

7.4.3.20 The galvanic anodes shall be installed on the pipeline to avoid mechanical damage of the pipes and galvanic anodes, breaking of the galvanic anode electrical connection with the pipeline, or damage of insulating and other coatings. After installation of each galvanic anode, integrity of its electric circuit shall be electrically tested.

7.4.3.21 The methods of galvanic anodes installation on the pipeline (including galvanic anode and doubler plate welding procedures) shall be approved by the Register. Never weld the galvanic anodes or their doubler plates to the pipeline welds. The minimum distance from the galvanic anode or doubler plate welding place to the pipeline weld shall be 150 mm.

7.4.3.22 When installing the galvanic anodes, the following conditions shall be met:

.1 bracelet anodes shall be securely attached or welded to the pipeline; when selecting the galvanic anode attachment method, loads applied to the galvanic anodes during laying shall be taken into consideration, depending on the pipeline installation method (e.g., loads from the pipe laying vessel's tensioners);

.2 for the bracelet anodes installed on the weight-coated pipelines, it is recommended to fill the gaps between the halves of the galvanic anodes and between the weight coating and galvanic anodes (usually 25 to 50 mm wide) with bitumen mastic or polymeric filler resistant to sea water;

.3 galvanic anodes shall be installed to minimize damage of the coating; the coating sections recovered after connection of the galvanic anode (e.g., cables) shall be tested for possible discontinuities;

.4 the galvanic anode cables (minimum 2) shall be connected to the pipeline to provide the required mechanical strength and electrical continuity and avoid the pipe damage in the connection point; the cables shall have a spare length sufficient to maintain integrity of the electric contact between the pipe and the galvanic anode in case of unexpected shift of the galvanic anode during laying;

.5 steel reinforcement of the concrete weight coating shall not be in contact with the pipe or the galvanic anode.

7.5 ELECTRICAL INSULATING JOINTS

7.5.1 General.

7.5.1.1 The electrical insulating joints shall provide electric sectioning of the pipelines, including electric isolation of the earthed subsea pipeline with or without the electrochemical protection system from the adjacent section/shore section/onshore pipeline with cathodic protection.

7.5.1.2 The electrical insulating joints shall meet the requirements of the international and/or national standards and technical documentation approved by the Register.

7.5.1.3 The electrical insulating joints shall not damage the structural layout of the subsea pipeline, deteriorate its performance characteristics, in particular, operating parameters related to transported medium pressure and flow rate or prevent passage of in-line inspection pigs.

7.5.1.4 The requirements for the list of technical documentation to be reviewed by the Register are specified in **2.14** of the SP Guidelines.

7.5.2 Requirements for the electrical insulating joints design.

7.5.2.1 The electrical insulating joints shall withstand the design loads applied to the pipeline, including temperature exposure, in the places of their installation.

The joint shall be non-detachable and connected to the pipeline by welding and/or flanges.

7.5.2.2 The joint structure shall be designed for combined action of the internal pressure and bending/ torsional moment, taking into consideration design loads on the pipeline). The level of the permissible total stress in the joint structure shall be agreed upon with the Register. The electrical insulating joints shall withstand design loads without compromising their structural, sealing or dielectric performance.

7.5.2.3 Material of the metal tube sections included in the joint shall correspond to the main pipeline material, including weldability, according to **4**.5.

7.5.2.4 Materials for the joint seals and fillers shall be designed for the whole pipeline service life, taking into consideration the transported medium properties. The insulating material shall have high non-absorbent, dielectric and thermal properties and provide performance under high compressive stress.

7.5.2.5 To avoid damage/electric rupture of the joint seals from external electric influence, an external and/or internal spark gap with the parameters specified in the technical documentation shall be provided.

7.5.3 Technical supervision during manufacture of electrical insulating joints.

7.5.3.1 The electrical insulating joints are subject to type approval according to the requirements specified in **2**.14 of the SP Guidelines.

7.5.3.2 The electrical insulating joints are subject to type (periodical) testing and acceptance testing during manufacture.

7.5.3.3 Type (periodical) testing shall include the following tests:

combined internal hydraulic pressure and torsional moment;

combined internal hydraulic pressure and bending moment;

fracture strength.

Upon agreement with the Register, the torsional and bending tests of the electrical insulating joints may be replaced with the finite-element stress analysis. Unless otherwise specified in the technical documentation approved by the Register, periodical (type) testing shall be conducted at least once every three years.

7.5.3.4 The extent of tests during manufacture of the electrical insulating joints shall meet the requirements specified in **2**.14 of the SP Guidelines.

7.6 CORROSION MONITORING SYSTEMS

7.6.1 When corrosive (hydrocarbons containing hydrogen sulphide, carbon dioxide, water, etc.) or highly erosive media shall be transported and design total corrosive and/or erosive wear of the steel pipe wall during the pipeline design life is more than **3**,0 mm, a corrosion monitoring system shall be provided for the subsea pipeline (or its section).

7.6.2 The corrosion monitoring system shall perform at least one of the following functions:

monitor change of the pipeline wall thickness (rate of wear) with direct or indirect measurements (e.g. monitoring the wall thickness with an acceptable physical method, monitoring the pipeline section weight, etc.), including the use of witness specimens;

monitor corrosive/erosive properties of the medium.

7.6.3 The necessity and sufficiency of the corrosion monitoring system functionality shall be substantiated in the design documentation submitted to the Register for approval.

7.6.4 The corrosion monitoring system sensors shall be installed in the most critical pipeline points in terms of corrosive and/or erosive wear according to the technical documentation approved by the Register.

7.6.5 The corrosion monitoring system sensors or witness specimens, depending on the accepted functionality of the system (refer to 7.5.**2**) shall allow:

analysis of the transported product, i.e. monitoring of the product physical properties and its sampling for the chemical analysis of the corrosive components (or anticorrosive additives) or corrosion products;

corrosion rate measurement, i.e. measurement of the weight loss of the reference plates or other removable specimens for periodic or real-time measurements;

wall thickness measurement at the place of installation, i.e. repeated wall thickness measurements in the determined pipeline cross-sections using portable or stationary devices.

7.6.6 The corrosion monitoring system control devices shall provide the following:

identification of the sensor signals as related to specific pipeline section;

data recording and storage;

monitoring absolute values and rates of change of the monitored parameter, generally, in real time.

8 PIPELINE INSTALLATION AND TESTING

8.1 GENERAL

8.1.1 Installation, laying and testing of subsea pipelines shall be carried out with due regard to the conclusions and recommendations obtained upon results of risk analysis of the above processes, based on the requirements of Section 10 and Appendix 3. The Section related to risk analysis shall be included in the documentation submitted to the Register for review and approval — refer to 1.5.10.

8.1.2 Prior to installation, laying and testing of subsea pipelines, the following shall be submitted to the Register for review:

.1 technical documentation specified in 1.5.7, 1.5.3.2.1 and 1.5.3.2.5;

.2 process documentation on:

storage, transport and handling of pipes;

assembly and welding of pipes and strings;

non-destructive testing, including visual examination;

application of coatings and insulation on weld area of pipes or strings;

repair and renewal operations for correction of defects detected.

8.1.3 Prior technical supervision for construction of subsea pipeline it is necessary to check a firm performing its installation and laying for compliance with the requirements specified in 1.10 of the SP Guidelines and issue the Certificates of Firm conformity (CCП) (form 7.1.27).

8.1.4 Prior to installation and laying of subsea pipelines, pipe-laying vessel equipment (welding equipment, positioning systems, tensioning machinery) or other equipment used for other laying methods shall be surveyed by the Register.

8.2 PIPELINE ROUTES AND SEABED SOILS

8.2.1 Pipeline routing.

8.2.1.1 The pipeline route and value of burial into the seabed soil shall be selected so that to minimize influence of lithodynamic processes on the operability and reliability of the pipeline.

8.2.1.2 Where possible, the subsea pipeline route shall avoid permafrost zones.

8.2.1.3 To minimize contact of the pipeline with the keels of drifting ice formations and stamukhas it is reasonable to lay the pipeline route along the line of maximum depth and parallel to the prevailing drift direction of ice formations.

8.2.1.4 Shore approach of the pipeline in the areas with the seasonal ice cover shall be designed as a hydraulic structure capable to take up ice load (local and global) at effective ice thickness with 10^{-2} 1/year probability. It is recommended that the contact area of a protective structure with ice shall be inclined to the horizontal plane at an angle to the horizon not exceeding 45° within the height range from the mean water level to ± double effective ice thickness.

8.2.1.5 Selection of the route shall minimize environmental risks and risks for the sea bioresources.

8.2.1.6 During subsea pipeline routing, on the sections of significant depth gradient, in order to avoid hazardous pipe bending the following requirement shall be meet:

$$R_t > 1000D_a \qquad (8.2.1.6)$$

where R_t = radius of the pipeline route curvature (horizontal and vertical planes), in m;
D_a = outside diameter of the pipe, in m.

Application of radius values smaller than those specified in Formula (8.2.1.6) during pipeline routing shall be subject to agreement with the Register.

8.2.1.7 It is recommended to move subsea pipeline shore crossing away from a river mouth in freezing and arctic seas to prevent possible erosion of the buried pipeline by vertical water flows at intense ice melting.

8.2.1.8 Prior to installation and laying of the subsea pipeline, additional studies along the pipeline route shall be carried out, when:

the period of time since the engineering survey to commencement of installation work is two years and above;

significant changes in seabed soil conditions is likely to have occurred;

the expected pipeline route is in areas exposed to hazardous effects, e.g., seismically dangerous;

new units, facilities, pipelines, etc. are present in the area.

8.2.1.9 During seabed preparation the following measures shall be taken prior to the pipeline laying along its route:

prevention of undesirable processes of any seabed soil erosion or drift;

removal of potentially hazardous facilities;

design of crossings with the preliminary laid pipelines and cables, pipeline shore approach;

underwater excavation.

8.2.1.10 Before laying the pipeline in a preliminarily excavated trench, the contractor with participation of a the RS surveyor to shall check invert levels of the trench

longitudinal profile. Excess in the trench bottom depth shall not exceed 0,5 m. The pipeline shall be prepared for laying by completion of an underwater trench excavation.

8.2.1.11 Laying of the pipeline on the seabed for subsequent burial thereof shall be allowed only provided that preliminary checking measurements and calculations show that bending radii of the pipeline will be not less than the minimum permissible values based on strength requirements.

Pipeline sections previously laid on the bottom for subsequent burial and backfill shall be examined to confirm that the pipeline is laid within the boundaries of the approved project corridor.

A concrete-coated pipeline may be laid after the concrete is cured to the design strength.

See Circular 1216

8.2.1.12 All preparation work on design of crossings whith pipelines and cables shall be carried out in compliance with a specification detailing the measures taken to avoid any damage to crossing installations.

The specification shall contain the requirements for:

the minimum distance between the existing installation and the pipeline;

coordinates of crossings;

marking of the pipeline route;

position and orientation of existing installations on both sides;

lay-out and profile of crossing;

anchoring of the pipeline and its structures;

installation of bearing structures (supports) or gravel beds;

measures to prevent erosion of the pipeline structural members;

monitoring;

tolerances;

any other requirements for pipeline structure and crossing.

8.2.1.13 When routing the pipeleine into the seismic active areas the following requirements shall be carried out:

.1 rigid fastening of pipelines to bottom and shore equipment shall not be allowed. Where such connections are necessary, the provision shall be made of pipe bends or compensating devices, the dimensions and compensation ability shall be determined by calculation;

.2 where the pipeline crosses the route section with soils being vastly differ from each other by seismic properties, the possibility of free movement and stain of the pipeline shall be provided. While burying the pipeline at such sections it is recommended to make a pipeline trench with inclined slopes and filling-in the pipeline with coarse-grained sand;

.3 crossing by the pipeline of active tectonic fault area is allowed at the angle close to 90°. Therewith, the method of non-embedded laying shall be used. In this case a definite (trapezoidal) trench form with inclined slopes (at least **1** : **2**) shall be used.

The section length of the pipeline crossing the tectonic fault is assumed equal to the fault width plus **100** m at each side from the fault zone edge. At the pipeline crossing edges of the active tectonic faults the structures for improving the pipeline flexibility (compensating devices) may be used;

.4 to ensure overall stability of the subsea pipeline in case of seismic wave directed along the longitudinal axis of the pipeline, the pipeline may be laid in the seabed. The burial depth shall be calculated with due regard to the diagrams of pipeline and soil interaction, physical nonlinearity of the pipeline material and the possible convexity of the pipeline in the vertical plane.

8.2.2 Seabed soils.

8.2.2.1 Terms and definitions.

Soft soil means a soil with bearing capacity insufficient for safe laying and operation of the pipeline. It generally means undercompacted or normally compacted water-saturated silts, shells, peats, loams, fluid and fluid-plastic clays (sometimes, dynamically unstable water-saturated silty sands of low and medium density can be also referred to the soft soil).

Dynamic liquefaction means avalanche decrease in bearing capacity of soil under alternating impacts caused by the increase in excess pore pressure and corresponding decrease in effective load of the soil skeleton.

8.2.2.2 General.

8.2.2.2.1 During design of subsea pipelines, the strength analysis at various stages of their construction (including laying and testing) and operation shall consider the features of geological engineering structure and properties of the seabed soils along the suggested route.

8.2.2.2.2 When implementing a subsea pipeline project, upon agreement with the Register, the seabed soil averages based on the previous engineering surveys and/or reference data may be used, provided that corresponding calculations will be performed at the detailed design stage using the soil parameters based on geological engineering surveys.

8.2.2.3 Requirements for geological engineering surveys.

8.2.2.3.1 The geological engineering surveys shall obtain the necessary design characteristics of the soils taking subsea pipeline load for calculations of the following:

subsidence and consolidation of the foundation soil;

local contact stresses (if required);

arranging trenches or soil stabilization;

dynamic stability of soils under seismic, wave and ice loads.

8.2.2.3.2 The range and scope of engineering surveys shall be specified in the survey program depending on the following:

complexity of geological engineering conditions along the pipeline route;

available data on the previous surveys and the necessity of refining geological engineering element occurrences (especially for rocky and low-compressible soils, soft soils, permafrost);

accuracy of soil property estimates;

quantitative characteristics of geological process dynamics.

8.2.2.3.3 In case of several pipeline routes within the same corridor, the number and depth of excavations shall be set in the survey program on the basis of the maximum depths and minimum distances between the pipeline route excavations based on the calculations approved by the Register.

8.2.2.3.4 The corridor width and the sampling depth shall depend on the requirements of the national and/or international standards. For the main pipelines (where the bottom surface is 10 m deep or less), the sampling interval shall be of 0,2 to 0,5 m in depth and 500 to 1 000 m along the route within the corridor with the minimum width of 500 m or equal to the distance between the extreme side anchors of positioned the pipe-laying vessel plus 100 m.

On landslide slopes, the sampling frequency shall be doubled, and within the coastal strip shall be tripled.

8.2.2.3.5 Within the strip as wide as specified in **8.2.2.3.4** along the subsea pipeline route, continuous seismoacoustic profiling shall be carried out on which basis the places for drilling geological engineering wells in the soft soil areas shall be specified.

8.2.2.3.6 The drilling and temperature measurement depth shall be, generally 6,0 to 8,0 m depending on the designed pipeline burial depth. In case of any silts or soft soils, the drilling depth shall be increased by the depth of their layers.

8.2.2.3.7 All the selected geological engineering elements shall be tested. Undisturbed samples of high-moisture fine soils shall be carried out preferably by using punch type or piston type samplers with a gate device. Preliminary description of the well cores shall be combined with the classification studies.

8.2.2.4 Requirements for seabed soil parameters.

8.2.2.4.1 Geological engineering surveys, including field and laboratory studies, shall provide the initial data in the amount necessary for design.

In addition to determination of the bottom profile and geophysical surveys, the field analysis of bottom deposits along the suggested route shall include penetration studies to clarify the composition and properties of foundation soils, taking samples for laboratory tests, evaluation of their quality in the natural conditions and preliminary description.

8.2.2.4.2 Soil properties shall be specified based on the results of the direct measurements conducted in the laboratory recognized by the national supervisory bodies according to methods prescribed in the national and/or international standards in a particular stress-strain state, taking into account the structure weight and cyclic loading.

8.2.2.4.3 When planning the programmes of laboratory tests, low bearing capacity and high property variations of the near-surface soil layers (0 to 2,0 m), increasing errors in their determination at the lower mean stresses shall be taken into consideration. The undisturbed (monolithic) core samples for laboratory study shall be about 90 mm in diameter and minimum 170 to 180 mm in length. The procedure and methods for sampling and sample quality control shall be agreed with the customer. Thus, it is necessary to meet the requirements for sampling, sample transportation and storage in compliance with GOST 12071-2000.

8.2.2.4.4 When calculating stress-strain state of the pipeline foundation soils, physically sound and practically tested software with conformity certificate shall be used. Selection of numerical simulation software shall be agreed with the customer.

8.2.2.4.5 During surveys, special attention shall be paid to the soft soil area. When calculating the bearing capacity, the parameters of non-consolidated soil shall be taken into account.

Undrained shear strength less than 0,075 MPa measured by rotational shear method and deformation modulus under load of 0,25 MPa and less than 5,0 MPa shall be taken as the soft soil criteria. The mentioned parameters shall be determined just after sampling in the conditions as close as possible to the natural conditions.

During survey up to 30 % of wells shall be drilled fully. During design the soft soils shall be generally replaced with medium-hard ones, more rarely, with fine sands, together with their permeability improvement.

When building the subsea pipelines to be buried into the soft seabed soil, the burial depth may be increased to isolate the pipeline from the soft soils. The soft soil layer can be retained, provided that the pipeline safety is substantiated through special calculations.

8.2.2.4.6 All loosely bound water-saturated foundation soils within the compressible strata shall be evaluated for the liquefaction potential under the designed dynamic impact: seismic impact (refer to 3.7) or impact caused by vortex-induced vibration (refer to 3.6.2).

To assess the risk of soil liquefaction, results of dynamic sounding and laboratory studies as well as calculative and experimental procedure for liquefaction potential estimation may be used.

For soil foundations of the subsea pipelines where seismic impacts are possible, all the water-saturated fine loose soils shall be checked for liquefaction. The sandy and loamy soils shall be checked partially in accordance with Table **8.2.2.4.6**.

8.2.2.4.7 When estimating the possible pipeline floating-up under a dynamic impact, relative movement of soil particles and pore fluid in the clearance between the pipe and the surrounding soil when the soil plastic

Table 8.2.2.4.6

Mass fraction of clay particles < 0,002 mm	Liquidity limit humidity, $W_p < 25,6$	Liquidity limit humidity, $W_p \geqslant 25,6$
Up to 10 %	Potentially liquefiable	Additional studies are required
Over 10%	Additional studies are required	Non-liquefiable

deformation level exceeds 10^{-4} shall be taken into account.

The averaged movement of the denser soil particles down and their accumulation at the bottom of the pipeline results in appearing additional vertical forces, which contribute to the pipeline upward displacement from the designed position. Value of these additional forces depends on the soil permeability, soil modulus of deformation, soil grading, and radial deformations of the pipeline.

8.2.2.4.8 During engineering surveys, the following mechanical and physical properties of seabed soils shall be determined:

bulk density and moisture of the soil in the natural conditions;

skeleton particle density;

maximum and minimum skeleton densities of the loose soils;

soil grading;

yield stress and plasticity limits;

filtration factor;

modulus of elasticity, modulus of deformation for compression and triaxial static loading, consolidation ratio;

internal friction angle and cohesion; undrained shear strength for clays under static and dynamic loads;

friction coefficient of backfill soils and pipeline external coating material;

shear modulus and damping ratio under dynamic load (method of ultrasonic sensing is *Bender element*, resonant column, triaxial dynamic compression);

soil in-water dumping density;

underwater slope stability angle;

static and dynamic Poisson's ratios;

product-in-the-pipe to backfilled soil heat transfer coefficient;

for half-rocky and rocky soils, uniaxial compression strength;

carbonate content.

8.2.2.4.9 Soil sample natural moisture shall be determined immediately after lifting the samples out of water.

Undrained shear strength of clay soils shall be determined for both undisturbed and broken structures; it is recommended to be done immediately after lifting samples out of water (micro-impeller, triaxial compression device).

8.2.2.4.10 In special numerical simulation cases, additional (special) laboratory studies of soils (for chemical activity to metals, gas content, creeping, stickness, thixotropy, fluid flow liquefaction conditions, x-ray analysis of samples, estimation of bottom deposits age, etc.) may be carried out upon the mandatory agreement with the customer.

See Circular 1216

8.3 ADDITIONAL MEASURES FOR PROTECTION OF THE PIPELINE IN THE AREAS OF INTENSE ICE GOUGING

8.3.1 General.

8.3.1.1 In water areas with seasonal ice cover (freezing seas: the Caspian Sea, the Baltic Sea, the Sea of Okhotsk, etc.) and on the marine arctic shelf (the Barents Sea, the Pechora Sea, the Kara Sea, Baydaratskaya bay), where presence of ice gouging is revealed instrumentally (underwater TV survey, sonar survey, diver survey), the pipeline shall be embedded into the seabed soil.

8.3.1.2 The subsea pipeline burial depth shall be assumed based on the design value of exaration which may be determined on the basis of:

the parameters of gouge distribution — refer to **8.3.2**;

simulating statistical modeling of the exaration — refer to **8.3.3**;

ice formation parameters — refer to **8.3.4**.

While choosing the method for determining the design value of exaration the preference shall be given to two methods given first above or their combination.

8.3.1.3 The subsea pipeline burial depth may vary along its route or assumed equal to zero (the pipeline not embedded) depending on the water area depth, exaration parameters and ice formations, for this it is recommended to divide the pipeline route by sections. The burial depth of the section shall be assumed as constant.

The subsea pipeline burial depth into the seabed along its route may vary or shall be taken equal to zero (unburied subsea pipeline) depending on water area depth, parameters of gouging and ice formations. For that reason, it is recommended to divide pipeline route into sections. Burial depth within a route section is assumed constant.

8.3.1.4 When no information of the exaration channel parameters is available, the following shall be assumed as a criterion for the route subdivision:

soil homogeneity of the route section;

occurence of ice keel drafts exceeding the sea depth.

Subdivision of the pipeline by sections may also base on the data obtained by means of mathematical simulation of the exaration process performed according to the procedure approved by the Register (refer to **8.3.3**).

8.3.2 Determination of the burial depth depending on the gouges distribution parameters.

8.3.2.1 The criteria for the pipeline division into sections shall be the following in priority order:

parameters of the gouge depth distribution;

the pipeline route crossing frequency of the gouges;

density of the gouges at the route section.

8.3.2.2 While optimizing the pipeline laying route in order to minimize the trench making expenses for burying the pipeline the criteria specified in **8.3.1.4** and **8.3.2.1** shall be used as optimization criteria.

8.3.2.3 To determine the maximum burial depth of the subsea pipeline into seabed at the pipeline route section having an intensive ice exaration the following parameters shall be specified:

average number (density) of gouges per 1 km^2; length, width and depth of the gouges.

The average shall be determined according to the length, width and depth of the gouges. It is necessary to record the coordinates of the gouge central point and end.

8.3.2.4 Parameters indicated in **8.3.2.3** shall be determined based on the data of engineering survey performed on the pipeline route (route sections) for at least 5 continuous years.

8.3.2.5 Design exaration value of the intended occurence h_N, m, shall be calculated according to the formula

$$h_N = \bar{h}\ln(n_t T) \qquad (8.3.2.5)$$

where $\bar{h}$ =sample mean of the depth of the gouges crossing the route within the limits of the section with exartation for the entire observation period, in m;

n_t = an average number of gouges crossing the route annually;

T = occurence period, years (when it is not otherwise stated, it is assumed equal to 100 years).

8.3.2.6 When the pipeline route is determined, the value n_t is determined directly from the engineering survey data.

8.3.2.7 When only the direction of the pipeline route is known and the direction of gouges is clearly expressed (the mode of the gouge direction distribution shall be clear cut), the value n_t is determined by the following formula

$$n_t = n_f M[L|\sin(\varphi)|] \qquad (8.3.2.7)$$

where n_f = gouge density per the unit area, in 1/km^2;

j = angle between the gouge and the route;

$M[]$ = expectation operator.

8.3.2.8 When the gouge direction is evenly distributed or the orientation of the gouges can not be determined, the value n_t shall to be determined according to the formula

$$n_t = 2\pi\bar{l}\,n_f \qquad (8.3.2.8)$$

where $\bar{l}$ = sample average length of the gouge, in km.

8.3.2.9 The pipeline burial depth into seabed H, in m, at the route (route section) with detected indications of ice exaration shall not be less than those determined by the formula

$$H = h_N + \Delta \cdot k_0 \qquad (8.3.2.9)$$

where Δ = margin for the burial depth, as a rule, is assumed equal to 1 m (the margin value may be decreased when the substantiation is available and the calculation is made according to the procedure approved by the Register).

k_0 = strength factor in terms of the pipeline class is assigned according to Table 8.3.2.9.

Table 8.3.2.9

Strength factor of the pipeline depth

Strength factor	Pipeline class					
	L, L1	L2	L3	G, G1	G2	G3
k_0	1,0	1,2	1,3	1,0	1,2	1,3

8.3.3 Simulating statistical modeling of the exaration process.

8.3.3.1 The design value of ice exaration at seabed may be determined by means of simulating statistical modeling of the exaration process approved by the Register. Furthermore, it is necessary that the procedure shall allow for wind conditions, tidally-influenced variations of water level, depth profiles, properties of seabed soils, statistical characteristics of morphometric parameters of ice formations obtained from the sufficient representative sampling.

8.3.3.2 Division of the pipeline route by sections shall be carried out according to **8.3.1.4**.

8.3.3.3 The pipeline burial depth into seabed shall be determined in accordance with **8.3.2.9** on the basis of the exartation h_N design value received as a result of the simulating mathematical modeling of this process.

8.3.4 Determination of burial depth depending on ice formation parameters.

8.3.4.1 To determine the design value of exaration based on the ice formation parameters for the route (section) of subsea pipeline the following parameters shall be determined:

h_s — sea depth with due account for tide, in m;

h_k — average value of drifting ice formation keel draught, in m;

σ_h — mean-square deviation of drifting ice formation keel draught, in m;

T_R — average time of ice formation existence, in days;

V — average speed of ice formation drift, in km/day;

N — average number of drifting ice formations per 1 sq. km during the ice period.

8.3.4.2 Parameters specified in **8.3.4.1** shall be determined for particulate sections of the pipeline route, within which their values are assumed constant based on the data of engineering survey performed for at least 5 continuous years.

8.3.4.3 The design value of exaration in case of definite parameters of ice formations specified in **8.3.4.1** is calculated in the following sequence:

8.3.4.3.1 Non-dimensional values of $\bar{h}_k$ and λ characterizing ice formation draft shall be determined by the following formulae:

$\bar{h}_k = h_k/h_s$ — ean draft ratio of the drifting ice formation (**8.3.4.3.1-1**);

$\lambda = \sigma_h/h_k$ — factor of variation of the drifting ice formation. (**8.3.4.3.1-2**).

8.3.4.3.2 The unit exceedance probability P_0 of the sea depth by the ice formation draft shall be determined from Table **8.3.4.3.2** by linear interpolation based on $\bar{h}_k$ and λ parameters.

Table 8.3.4.3.2

Probability P_0

P_0		$\bar{h}_k$				
		0,2	0,4	0,6	0,8	0,9
λ	0,2	0,0	0,0	0,002119	0,11043	0,473398
	0,4	0,0	0,002369	0,063711	0,238911	0,446778
	0,6	0,000069	0,023542	0,130977	0,280456	0,420216
	0,8	0,001554	0,055157	0,169684	0,289655	0,393701
	1,0	0,006738	0,082085	0,188247	0,286505	0,367879

8.3.4.3.3 On the assumption of the availability of ice formation keel contact with the pipeline with the margin 10^{-2} 1/year the parameter a is determined:

$$a = 0{,}99^{\frac{1{,}6}{P_0 N V T_R T}} \qquad (8.3.4.3.3)$$

where T = estimated service life of the pipeline, in years.

8.3.4.3.4 Parameter Z shall be calculated from Table **8.3.4.3.4** based on a and λ parameters:

Table 8.3.4.3.4

Parameter Z

Z		a		
		0,9999	0,99995	0,99999
λ	1,0	9,21	9,90	11,51
	0,8	10,70	11,43	13,11
	0,6	13,46	14,25	16,06
	0,4	20,00	20,91	22,99
	0,2	47,98	49,31	52,27

8.3.4.3.5 Burial factor K shall be determined by the formula

$$K = Z\lambda^2\bar{h}_k \qquad (8.3.4.3.5)$$

being a criterion of necessity for the subsea pipeline burial into the seabed soil on the route section in question:

where $K \leqslant 1$ burial of the pipeline is not required;

where $K > 1$ burial of the pipeline is required.

8.3.4.3.6 The design value of exaration at the pipeline section under consideration h_N, in m, shall be determined by the formula

$$h_N = h_s(K-1)k_g \qquad (8.3.4.3.6)$$

where k_g = a correcting factor taking into account the seabed soil properties shall be assigned in compliance with Table 8.3.4.3.6.

Table 8.3.4.3.6

Correcting factors taking into account the seabed soil properties k_g

Soil type	Sands	Clay sands, clay	Clay
k_g	0,95	0,60	0,20

8.3.4.4 Division of the pipeline route by sections shall be carried out in compliance with **8.3.1.4**.

8.3.4.5 The subsea pipeline burial depth into the seabed shall be determined in compliance with **8.3.2.9**.

8.4 MARINE OPERATIONS FOR PIPELINE LAYING

8.4.1 The requirements of the present Chapter are applicable to pipe-laying vessels and barges performing the pipeline laying on the seabed. The pipe-laying vessel shall be classed with the Register or other classification society recognized by the Register. The vessel shall be fitted with all necessary systems, arrangements and equipment for pipe-laying operations, including the starting/ending stages of laying, laying interruption in storm conditions, and the use of additional buoyancy devices, where necessary. The technical documentation to be reviewed by the Register for these procedures shall contain requirements to the following:

anchors, anchor chains/cables (lines) and anchor winches;

fastening pipeline strings at the beginning of laying;

positioning the vessel and positioning control;

dynamic positioning equipment (if any);

systems and equipment for monitoring the position and geometry of the laid pipeline part;

seaworthiness of the vessel in the region;

crane equipment, including those for lowering/lifting the pipeline strings, and the pipe loading procedures;

process equipment for pipeline installation and laying, including stinger, tensioners, buoyancy devices, etc.

8.4.2 A maintenance manual for all systems and equipment to provide safety of operations shall be available on board the ship. Prior to operation the vessel and systems shall be surveyed by the Register (refer to **8.1.3**).

8.4.3 For anchoring of the pipe-laying vessel it is necessary to prepare a layout chart of anchor lines. The pipe-laying vessel shall operate in strict compliance with the layout chart of anchors providing the required forces on the tensioners. The technical documentation submitted for the Register approval shall contain the following information:

expected pipeline route and laying corridor; location of existing pipelines and installations;

prohibited anchoring zones; position of each anchor line touch down points and cable touch down point;

vessel position for running each anchor and working position of the vessel when the anchor running is completed;

anchor lines handling with regard to weather limitations.

8.4.4 The minimum distances shall be specified between the anchors, anchor chains (ropes) and any existing fixed structures of subsea installations, pipelines or cables.

8.4.5 Requirements shall be specified for the positioning system and its accuracy for each type of the vessel and appropriate environmental conditions wind and current velocities, wave parameters and water area depths. The accuracy of the horizontal surface positioning systems shall be consistent with the requirements for the permissible deviations of the pipeline centerline in the process of laying which, as a rule, shall not exceed $\pm 3{,}0$ m. In order to monitor the positioning, the appropriate monitoring systems shall be developed, reference points shall be established.

8.4.6 Positioning systems shall have at least 100 % redundancy to avoid errors and faults in positioning. Documentation showing that the system has been checked within the specified limits of accuracy shall be prepared for familiarization to the surveyor to the Register prior to commencement of the pipeline laying.

8.4.7 A vessel using a dynamic positioning system for station keeping and location purposes shall meet the requirements of IMO MSC/Circ. **645** (the Guidelines for Vessels with Dynamic Positioning Systems).

8.4.8 Prior to commencement of assembly operations, the dynamic positioning system shall be tested to ensure that all control devices operate within the prescribed limits of accuracy. The remote control system of propellers shall be tested in operation with the reference system, as well as in different failure modes.

Monitoring, alarm and back-up systems shall be tested in accordance with the established test procedures. The tests shall be witnessed by a surveyor to the Register.

8.4.9 Specialized vessels and barges fitted with the equipment for subsea pipelines burial shall meet the applicable requirements in **8.4.1** to **8.4.8**. Besides, the technical documentation on subsea pipeline burial to be reviewed by the Register shall contain requirements to the following:

devices for burying pipelines, including soil dumping/sampling;

devices for trench backfilling;

systems for controlling end position of the buried pipeline;

pipeline strength testing when moving it into the trench.

8.5 METHODS OF PIPELINE LAYING ON SEABED

8.5.1 Subsea pipelines may be laid on seabed using different methods, the basic methods are as follows: seabed pull, free immersion, laying from the pipe-laying barge or vessel, lowering from ice, directional drilling. Other methods or their combination may be applied.

8.5.2 During selection of the laying method account shall be taken of environmental conditions, sea depth, seabed soil properties, duration of ice formation period, type of medium to be transported, possibility of tensile forces in the pipeline during laying, geometrical pipe parameters and pipeline material properties.

8.5.3 The subsea pipeline laying procedure shall be based on its movement to the route cross section and lowering to the seabed. Subsea pipeline laying flow diagrams shall indicate location of the installation site, methods of pipeline movement to the route cross section, application of tensile forces to the pipeline, pipeline buoyancy control and tie-in of the strings. See Circular 1216

For pipeline laying one of the following process flow diagrams may be used:

.1 pipeline laying from a pipe-laying vessel with successive tie-in of the strings or unreeling from a reel;

.2 seabed pipeline pull of the pipeline with the preliminary full-length installation at the coastal assembly site;

.3 seabed pull of the pipeline with successive tie-in operations;

.4 pipeline lowering by free immersion with preliminary installation in the route cross section;

.5 pipeline lowering by free immersion with successive tie-in of the strings;

.6 near-bottom tows and lowering of the strings into the cross section;

.7 lowering with the use of inclined drilling.

Combination of different laying methods at subsea pipeline sections may be applied depending on the environmental conditions and route profile.

8.5.4 Pipeline laying by seabed pull.

8.5.4.1 The laying flow diagrams referred to in **8**.5.3.**2** and **8**.5.3.3 shall be used for short subsea pipelines, selection of the particular laying flow diagram shall consider the pipeline length, route profile, weight and buoyancy, pulling facilities and their possible location (ashore and/or aboard).

8.5.4.2 When pulling of the pipeline (string) its bending radius at launchways shall not be less than the value stated in **8.2.6**. When the less bending radius is assigned (curvature radius of launchways) the pipeline (string) strength shall be confirmed by the relevant calculation.

To decrease pulling force it is acceptable to use pontoons relieving the pipeline strings due to their lifting force and reducing the force of friction with the seabed.

8.5.4.3 When the pulling method is used, the following process documentation shall be prepared and submitted to the Register for review:

assembly and welding procedure of the pipeline strings at the coastal assembly site;

pulling flow diagram with indication of force application parameters and ways of rope anchoring;

procedure for pipeline string joining (tie-in);

pontoon pattern and calculation of pipeline (string) strength near pontoon location;

calculation of the pulling force and the pipeline (string) drag force;

structural diagram of lauchways.

See Circular 1216

8.5.5 Pipeline laying by towing afloat.

8.5.5.1 Application of laying flow diagrams referred to in **8.5.3.4** to **8.5.3.6** related to sea operations with the floating pipelines (strings) shall be limited by the allowable weather conditions along he pipeline route during laying and shall consider the sea depth, pipeline (string) length, weight and buoyancy, applicable towing devices and method of pipeline lowering onto the seabed.

8.5.5.2 This method of laying may also be used when installing the pipeline on the pipe-laying vessel, which is held motionless at anchor, and pulling the pipeline string, for example, toward the coast or a water area where the pipe-laying vessel is limited by its draught.

In any case, this method requires the floating string to be sufficiently strong and straight, especially in presence of wind, currents and waves. In case of considerably long strings or distant place of laying (long towing distance), measures shall be taken to secure the pipeline string whenever hydrometeorological parameters exceed the permissible ones (for example, to several pre-installed dead anchors).

8.5.5.3 Where pipeline is laid by towing afloat the following shall be developed and submitted to the Register for review:

assembly and welding procedure of the pipeline strings at the coastal assembly site;

pipeline (strings) launching and towing flow diagrams;

pontoon structural diagram and pontoon patterns (in case of negative buoyancy to the pipeline or string);

pipeline (string) additional ballasting flow diagram at excessive positive buoyancy;

water filling or pontoons release flow diagram;

pipeline (string) strength analysis when lowering onto the seabed;

procedure for pipeline string joining (tie-in);

diagram of pipeline string release in storm conditions.

8.5.5.4 At significant sea depth resulting in excess of allowable stresses during laying, method of free immersion of the pipeline (string) shall be supplemented by application of tensile forces or self-tensioning of the pipeline (string) when fastening its ends to the fixed shore piers. Pipeline strength analysis for determination of the required tensile force value shall be submitted to the Register for review.

For this purpose, in case of excessive positive buoyancy to the pipeline (string) it is allowed to use temporary (while laying) weight ballasting.

8.5.5.5 While making a design model for strength analysis of the submerged pipeline (string) section, non-zero limit conditions of the floating pipeline (string) sections shall be considered.

See Circular 1216

8.5.6 Steel pipeline laying from a pipelayer.

8.5.6.1 Subsea pipeline laying flow diagram referred to in **8.5.3.1** shall meet technical parameters of the pipelayer (including pipeline lowering methods and work limitations due to weather conditions), take into consideration sea depth and route configuration, geometrical parameters and properties of pipe material.

8.5.6.2 The pipeline strength during laying operations shall be provided as well as the absence of initial pipe damages after laying, such as residual plastic deformations and corrugations (local buckling) of the pipe wall and breakdown of ballast system or insulation shall be ensured. Tensioners shall be used (tensile forces shall be applied) at considerable depths of the pipeline laying.

8.5.6.3 When method of the pipeline laying from a pipelayer with successive tie-in of the strings is used the following process documentation shall be prepared and submitted to the Register:

laying flow diagram and design model;

assembly and welding procedure of the pipeline strings;

pipeline strength analysis during laying;

documentation specified in **8.4.1** to **8.4.9**.

8.5.6.4 Laying of pipeline by *J*-method shall assume application of the horizontal force to the upper end of the pipeline, sufficient to ensure safe laying. The force shall be created by tensioners, anchoring system or dynamic positioning system of the pipelayer. Reliable positioning systems having at least double redundancy of the total pulling force shall be used. It is preferable to use the pipelayers (pipe-laying vessels) of semisubmersible type or stop laying in waves which may cause initial pipe damage.

8.5.6.5 Horizontal force applied to the upper end of the pipeline during its laying by *J*-method shall not be less than the value of *F*, in kN, determined on the basis of the following:

$$S_x^2 - S_x S_{hp} < 0{,}9 k_\sigma R_e^2 - S_{hp}^2 \qquad (8.5.6.5\text{-}1)$$

where S_{hp} = hoop stress, in MPa, obtained from the formula

$$S_{hp} = \frac{\rho_w g h D_{int}}{2t_c} 10^{-6}; \qquad (8.5.6.5\text{-}2)$$

S_x = total longitudinal stress, in MPa, obtained from the formula

$$S_x = S_1 + S_2; \qquad (8.5.6.5\text{-}3)$$

S_1 = longitudinal stress due to the horizontal force, in MPa, obtained from the formula

$$S_1 = \frac{F}{(D_{int} + t_c)t_c} 10^{-3}; \qquad (8.5.6.5\text{-}4)$$

S_2 = longitudinal stress due to bending in the minimum pipeline curvature, in MPa, obtained from the formula

$$S_2 = \frac{M}{\pi(D_{int} + t_c)^2 t_c} 10^{-6}; \quad (8.5.6.5\text{-}5)$$

M = maximum bending moment in the pipeline, in kNm, obtained from the formula

$$M = \frac{E\pi D_{int}^4[1-(1-2t_c/D_{int})^4]h}{64L^2} \frac{(1+m)(2+m)}{6^m[1+(2+m)^2/6^{(1+m)}h^2/L^2]^{3/2}} 10^{-9}; \quad (8.5.6.5\text{-}6)$$

L = free span length, in m, obtained from the formula

$$L = \sqrt{\frac{2Fh}{\gamma_p A}}; \quad (8.5.6.5\text{-}7)$$

m = dimensionless parameter, obtained from the formula

$$m = \frac{h\gamma_p A}{3F}; \quad (8.5.6.5\text{-}8)$$

A = pipe cross section area, in m^2, obtained from the formula

$$A = \pi t_c(D_{int} + t_c)10^{-6}; \quad (8.5.6.5\text{-}9)$$

where E =Young's Modulus of pipe material, in MPa;
g = gravity acceleration, in m/s^2;
h = sea depth at the laying area, in m;
γ_p = specific weight of the pipe in water, in kN/m^3;
p_w = sea water density, in kg/m^3;
D_{int} = internal pipeline diameter, in mm;
t_c = pipe wall thickness, in mm;
k_σ = strength factor assigned according to Table 8.5.6.5.

Table 8.5.6.5

Strength factor due to the pipeline class

Strength factor	Pipeline class					
	L, L1	L2	L3	G, G1	G2	G3
k_σ	1,0	0,95	0,9	1,0	0,95	0,9

8.5.6.6 During pipeline laying from a pipelayer by *S*-method, the pipeline strength analysis shall be submitted to the Register for review, the minimum force in the tensioner shall be assigned as the result of above analysis, having regard to stinger or slip geometry, provided the pipe strength criteria is met at each pipe section

$$S_x^2 - S_x S_{hp} + S_{hp}^2 < 0{,}9 k_\sigma R_e^2 \quad (8.5.6.6)$$

where S =total longitudinal stress in the pipe at the risk sections of the minimum curvature, in MPa;
S_{hp} = hoop stress in the pipe at the risk sections of the minimum curvature, in MPa; k - strength factor assigned according to Table 8.5.6.5.

8.5.6.7 During pipeline laying from a pipelayer with unreeling from a reel, the following process documentation shall be submitted to the Register in addition to one specified in **8.5.6.3**:

reeling the pipeline on the reel (changeable drum);

pipeline tension control.

8.5.6.8 Reeling of the pipeline (strings) shall not result in the axial pipe strain exceeding 0,3%. The pipe-laying vessel shall be fitted with a device to restore the shape of the pipe cross-section while unreeling of the pipeline.

8.6 SUBSEA PIPELINE TESTING BY PRESSURE

8.6.1 General.

8.6.1.1 Subsea pipeline pressure test shall be performed after the complete installation of pipeline system or its section (full backfilling, setting of valves, instrumentations and protectors, etc.), pipeline bore smart pigging, as well as submitting the required documentation to the Register (refer to **8.6.2**).

8.6.1.2 Subsea pipeline pressure testing shall be conducted in two successive steps: strength test and leak test. Strength and leak tests shall be carried out by hydraulic method; it is allowed to perform leak test of gas pipelines by pneumatic method.

Pipeline hydraulic testing by water at air temperature bellow zero and/or at sea freezing temperature is allowed provided that the pipeline, valves and instrumentation are protected against freezing. Testing by pressure is only allowed when hotline communication is provided. See Circular 1216

8.6.2 Documentation.

The pressure test shall be described in a test program or process documentation, which is subject to approval by Register prior to testing. The documentation shall contain the following:

.1 operation manuals, including: See Circular 1216

pipeline filling with test medium;

method and rate of pressurization;

equipment/sections to be isolated during a holding period;

method and rate of pressure relief;

dewatering and removal of the test medium;

internal drying of pipeline, if necessary;

emergency and safety procedures and precautions;

.2 equipment and systems:

description of the pipeline section to be tested (dimensions, valves, pumps, etc.);

description of the test medium, including possible use of chemical additives;

specification of instrumentation and measuring devices (temperature, pressure, flow rate), including their location and connection;

description of calibration and marking of equipment; distribution of temperature measuring devices along the length of the pipeline;

.3 calculations:

temperature and other environment influence on pressure, including estimation of the sensitivity of

the test medium temperature due to variations of the seawater temperature;

"pressure-volume" assumption diagram.

8.6.3 Safety measures.

The test area shall be surrounded with warning signboards displayed in order to prevent unauthorized personnel from entering during the pressure test.

8.6.4 Strength test.

Pipeline strength testing by pressure shall be carried out for verification of the pipeline capability to operate at the working pressure with a specified safety margin. Minimum pressure during the hydrostatic strength test shall be equal.

for oil-products pipelines and gas pipelines to 1,25 times design pressure.

During hydrostatic strength testing the total stresses in the pipe shall not exceed 0,95 the pipe metal yield stress for the pipe wall thickness taken with negative wall thickness tolerance.

When testing the pipeline, the pressure building up rate shall not exceed 0,1 MPa/min, as soon as the pressure value reaches 0,9 of the test pressure, the rate of pressure buildup/drop shall be reduced up to 0,01 MPa/min.

Holding time of the pipeline at test pressure (without regard of pressure buildup and/or drop time, as well as holding time for equalization of temperature and pressure) shall be minimum 12 h.

The pipeline is considered as having passed the strength test, if over the test period the pressure drop shall not exceed 1 % under continuous monitoring of pressure and temperature values or their discrete measurements every 30 min.

8.6.5 Leak test of the subsea pipeline shall be carried out after the strength testing by reducing the test pressure to the value exceeding 1,10 times design pressure. Duration of leak test shall be determined by the time required for inspection of the whole route or the test section, the test duration shall be minimum 12 h without regard of pressure buildup and/or drop time, as well as holding time for equalization of temperature and pressure.

The pipeline is considered as having passed the leak test, if over the test period no leakage was detected, and change of pressure shall not exceed ±0,2 % under continuous monitoring of pressure and temperature values or their discrete measurements every 30 min. Pressure variations in the pipeline up to ±0,4 % shall be allowed due to fluctuations in the ambient temperature and sea level during the test period.

8.6.6 Test medium.

The test medium shall normally be filtered fresh water or filtered seawater, which, in order to avoid internal corrosion in the pipeline, may be chemically treated.

8.6.7 Pipeline flooding and pressurization.

8.6.7.1 During flooding of the test section, precautions shall be taken to limit the air inclusion to less than ±0,2 % of the total filling volume.

8.6.7.2 For all methods of strength and leak tests, the pressure shall be measured using calibrated remote instruments or pressure gauges with a range equal to 1,25 the test pressure and the accuracy class not less than 1.

8.6.7.3 Air inclusion measurement in the test section shall be carried out during initial pressurization. This may be done by establishing a "pressure-volume" diagram based on the pressure and volume values measured during the pressurization.

8.6.8 Conservation of the test section.

In order to avoid internal corrosion, conservation of the test section shall be done after the pressure test. Inert gas or inhibited water may be used for the purpose.

8.6.9 Dewatering and drying. See Circular 1216

Disposal of inhibited water or its recycling requires permission from the national supervisory bodies. Where drying is required, in order to prevent internal corrosion or hydrate formation, the detailed description of the procedure shall be submitted to the Register for approval.

9 MAINTENANCE AND REPAIR

9.1 MAINTENANCE

9.1.1 General.

9.1.1.1 Safety, efficiency and reliability of subsea pipeline operation shall be ensured with the regulated pipeline maintenance system, which shall be developed by a pipeline owner on the basis of the requirements of supervisory bodies, standards of the firms the above owner is associated with, and the Rules requirements.

9.1.1.2 The maintenance of subsea pipeline items shall include: periodic inspections of the pipeline route;

instrumental studies of the pipeline route and the pipeline itself (pipeline fault detection);

periodical monitoring of the pipeline items and systems condition;

hydraulic tests of the pipeline;

repairs and repair-and-prevention works, including those after potential exposure to the accidental extreme loads.

9.1.1.3 Hydraulic tests shall be carried out after repair, modification and expiration of the estimated service life of pipelines, as well as in case of failure to perform (incomplete performance) of flaw detection during the periodical inspections and examinations.

9.1.1.4 Periodical monitoring of the pipeline items and systems condition shall be carried out with regard to:

cathodic protection/galvanic anode system and ballasting;

isolation valves;

automation and alarm systems;

flanged joints;

standpipes and pipeline shore approaches.

9.1.1.5 The RS participation in periodical examination and studies depends on the quality of maintaining the pipeline transport system by its owner and is a prerequisite to confirm the RS class for the subsea pipeline.

9.1.1.6 Maintenance regulations for the subsea pipeline items included in the Nomenclature of items of the RS technical supervision of subsea pipelines (refer to 1.6 of the SP Guidelines) are subject to the RS approval.

9.1.1.7 Any changes of the maintenance regulations regarding the subsea pipeline items specified in **9.1.1.6**, including any repairs, shall be agreed with the Register.

9.1.2 Examination and studies program.

The owner of the subsea pipeline transport system establishes the procedure for examinations, studies and the pipeline maintenance regulations, which specify their frequency and extent, including the extent of initial, periodical, special examinations and studies and methods of their performance (in-line inspection, measurements of the external defects, etc.). It is recommended to harmonize the owner's system of pipeline examinations and studies with the RS system of periodical surveys (refer to 1.4 of Part I of the SP Rules and Section 4 of the SP Guidelines).

The document containing the above provisions shall be submitted to the Register for review prior to the subsea pipeline commissioning.

9.1.3 Periodical examination and studies.

9.1.3.1 The subsea pipeline transport system in operation shall be subject to periodical examinations and studies. Their performance is mandatory for the owner who shall notify the Register about the terms, methods and extent of the inspection. The examinations and studies shall be carried out by the RS-recognized organization involved in the in-water surveys and/or in-line inspections of subsea pipelines, in accordance with the requirements of Section 1.8 of the SP Guidelines, and shall be supervised by the Surveyor to the Register.

9.1.3.2 The basic requirements for examinations and studies and evaluation of their results are specified in **9.1.4** and **9.1.5**.

9.1.3.3 The terms of periodical examinations and studies, and the composition of parameters to be monitored during their performance shall be specified in accordance with 4.1.2 and 4.1.4 of the SP Guidelines. In so doing, the actual technicall condition of the subsea pipeline and potential subsea pipeline damages after extreme natural or technogenic impacts (earthquakes, storms, registered effects of fishing tools, etc.) shall be considered.

9.1.4 Frequency of periodical examinations and studies.

Setting the dates for conducting periodical examinations and studies, the following shall be considered:

predicted values of corrosive and erosive wear of pipes and potential deterioration of the mechanical properties of material during multiyear operation;

presence of active lithodynamic processes of the seabed soil;

presence of seabed soil drift/erosion and ice exaration, including in way of the pipeline shore crossing;

unsteadiness of the hydrometeorological parameters in a water area;

results of the previous examinations and studies.

Periodical examinations and studies shall be conducted annually according to the regulations agreed upon with the Register, following therewith the instructions of 4.1.4 of the SP Guidelines.

In the event of extreme natural or technogenic impacts on the subsea pipeline, provision shall be made for extraordinary examinations and studies, as well as for pertinent repairs, which extent is agreed upon the Register.

9.1.5 Scope of periodical examinations and studies.

9.1.5.1 In order to assess the technical condition and to provide the further safe operation of the subsea pipeline, as well as to plan the maintenance, the periodical examinations and studies shall provide for the following types of works:

general study of the pipeline route, including determination of its attitude position and the free span length of its sections;

determination of the depth of the protective layer of the seabed soil (for subsea pipelines buried into the seabed soil);

inspection of corrosion-protection coating condtion;

inspection of ballasting condition;

in-line inspection and external underwater studies to detect defects (fault detection);

inspection of valves condition;

inspection of cathodic protection/sacrificial anode system condition. The composition of subsea pipeline parameters recorded in the above works shall meet the requirements of 4.1.2 and 4.1.3 of the SP Guidelines.

9.1.5.2 For periodical examinations of standpipes, the following items apply, in addition to those specified in **9.5.1.1**:

examination of clamps and bolts;

examination of flanges condition;

assessment of marine fouling.

9.1.5.3 The assessment of the technical condition of subsea pipeline valves shall provide for:

checking of the remote drive operation;

flaw detection for flange and fastenings defects;

hydraulic testing;

flaw detection for the valve body defects;

flaw detection for shut-off and sealing components.

9.1.6 Records of periodical examination and studies results.

9.1.6.1 The subsea pipeline owner shall submit to the Register review the results of periodical examinations and studies performed in terms and to the extent specified in **9.1**.4 and **9.1**.5.

9.1.6.2 The subsea pipeline owner shall record and take into account the completed results of periodical examinations and studies during the entire pipeline service life.

9.1.7 Modification.

Design modification of the existing pipeline system shall be subject to approval by the Register. All documentation with calculations and explanations shall be submitted to the Register for reveiw prior to commencement of modification work and shall contain the following information:

design modification;

assessment of the environmental influence in performance of modification;

list of equipment to be used during modification; quality control and acceptance criteria.

9.2 REPAIR OF SUBSEA PIPELINES

9.2.1 General.

9.2.1.1 Repair of subsea pipeline (scheduled, emergency) shall be carried out based on the results of its complex survey and flaw detection made in compliance with 4.**1**.**2** and 4.**1**.**3** of the SP Guidelines.

9.2.1.2 Based on the results of the survey and flaw detection the following is to be carried out:

specification of a faulty section of the pipeline;

planning of measures for safe operation of the pipeline;

selection of repair type and method;

evaluation of pipeline technical condition prior and after repair work.

9.2.1.3 Type and method of repair work, as well as engineering and design documentation developed for its implementation (refer to **9.2.2**) shall be approved by the Register.

9.2.1.4 It is prohibited to carry out work on selective repair of defects, including elimination of impermissible free span lengths and stripping, without developing the relevant technical documentation.

9.2.1.5 Routine repair, as a rule, is carried out together with technical maintenance of subsea pipeline according to the operation regulations approved by the Register or a document replacing thereof and on the basis of the operating standards of the enterprise-owner/pipeline operator.

9.2.1.6 Mandatory survey of repairs sections of the subsea pipeline shall be carried out by the Register within the next periodical survey.

9.2.2 Technical documentation.

9.2.2.1 Any purpose repair of the structures, arrangements and equipment of the subsea pipeline system shall be carried out in compliance with technical documentation approved by the Register.

9.2.2.2 Technical documentation of repair operations shall include the following:

permissible parameters of weather and hydrologic conditions for repair conducting;

type of damage to be repaired;

engineering documentation for welding (where required);

conditions of repair, including the conditions of safe lifting of the pipeline string above the water surface for repair (where necessary);

list of equipment and tooling backup required for preparing and conducting of repair and after-repair work;

preparing a place for repair work;

repair technology;

after-repair procedures, including nondestructive methods of testing, pressure tests and acceptance criteria;

job safety and ecological safety requirements.

9.2.3 Repair technology.

9.2.3.1 Repair work on the subsea pipelines shall be carried out by specialized organizations having Certificate of Firm Conformity (ССП) (form 7.**1**.**27**) issued by the Register (refer to **1**.**11** of SP Guidelines).

9.2.3.2 Welders having valid Welder Approval Test Certeficate (form 7.**1**.**30**) in compliance with 5.**3**.5 shall be permitted to conduct welding operations. Welding materials and technologies shall be approved by the Register.

9.2.3.3 After repair the subsea pipeline shall be restored with substantiating the calculating service life in compliance with the design technical requirements and modes of operation. The necessity of pressure tests after repair subject to special consideration in each particular case with due regard to the scope of repair work performed.

9.2.3.4 In case of major defects which may result in restrictions of pipeline operating modes and reduction of design service life, the appropriate calculations subject to special consideration of the Register.

9.2.4 Repair of the pipelines structures.

9.2.4.1 Pipes or pipelines with defects or damage in excess of the norms of technical requirements to the permissible defect value shall be repaired.

Defects subject to mandatory repair include: external pipe damage;

damage of corrosion-resistant coating of the pipe, weight coatings/ballast weights;

damage of cathodic or galvanic protection;

defects of welded joints;

deformation and buckling (sagging) of the pipeline;

damage of field joints;

damage due to corrosion;

damage of fasteners, control instrumentation, etc.

9.2.4.2 Defective sections of the pipeline route shall also be repaired, such as pipeline stripping, bed load, defects of bunded area and structures crossing other subsea pipelines, cables, etc.

9.2.4.3 External damage of steel pipeline sections, such as notches, roughness, etc. may be eliminated by scraping. In this case, the minimum pipe wall thickness shall be within tolerances.

9.2.4.4 Repair of welding joint where impermissible defects have been found by non-destructive testing or visual examination shall be carried out according to the schedule approved by the Register including the methods for defect elimination and a defective section welding. After repair the repeated check of welding quality shall be carried out by visual-inspection control and non-destructive testing.

9.2.4.5 Repair of corrosive and erosion sections shall be allowed only after their flaw detection and evaluation of condition for compliance with the technical requirements. A decision on performing repair shall not be made till the extent of the corrosive defects is determined.

9.2.4.6 Pipeline sections having impermissible deformations and which are not subject to repair shall be cut as a whole with subsequent replacement.

9.2.5 Repair of pipeline system without interruption of its operation.

9.2.5.1 The possibility of the pipeline repair resulting in a temporary interruption of its operation shall be allowed only subject to special consideration by the Register. Any such repair shall result in a restored serviceability of the pipeline system or its serviceability for the remaining period of its service life.

9.2.5.2 The following defects in excess of the acceptable ones refer to the pipeline damage resulting in a temporary interruption of its operation:

damage due to corrosion and erosion (internal and external);

cracks of any origin;

damage due to external impact with violation of integrity of coatings, surface and geometrical shape of the pipe;

unacceptable sagging of the pipeline;

significant disturbance of ballast neight (loss of ballast weights).

9.2.5.3 Values of pipe wall defects measured during the flaw detection shall be be assessed by the methods approved by the Register in compliance with **4.1.3** of the SP Guidelines.

9.2.6 Repair of a damaged section with installation of bolted clamps and other devices perceiving internal pressure of the conveyed media may be accepted subject to special consideration by the Register.

Repair of cracks by welding according to the procedures approved by the Register is permitted in cases when the case is known and the measures are taken for elimination of such causes.

9.2.7 The possibility of conducting and methods of repair work for the flexible pipelines subject to special consideration of the Register.

9.2.8 During welding and thermal cutting of steel pipelines intended for conveying of fire-hazardous and explosive substances special safety measures shall be taken.

9.2.9 One of possible ways of pipeline non-interruption repair, upon agreement with the Register, is the use of reinforcing (squeezing) clamps, which are placed on the pipeline and their bolted connections are tightened; they produce the contact pressure thus significantly reducing the pipe hoop stresses in the area of defect area and stopping its propagation.

9.2.10 The use of the reinforcing clamps to repair defects in steel pipelines is subject to special consideration by the Register depending on a type of defect.

9.2.11 Steel or composite reinforcing clamps, having type approval of the Register, shall be used. The defective area shall be overlapped with a clamp at least **50** mm from each edge, and the pipeline defect (defective area) shall be filled with a curable compound.

9.2.12 The collar installation procedure shall be reviewed by the Register. For the clamps installed under water, the compounds capable for underwater application shall be used.

9.2.13 The use of reinforcing clamps shall be verified by calculating the strength of the defective area, taking into account the existing operational conditions of a subsea pipeline.

10 SAFETY ASSESSMENT

10.1 SCOPE OF APPLICATION

10.1.1 For the purpose of this Section the objects of safety assessment are: subsea field oil, condensate and gas pipelines;

subsea main oil, condensate, gas and oil product pipelines;

subsea distribution oil product and gas pipelines;

technological product pipelines containing hazardous substances.

10.1.2 This Section does not apply to hoses and temporary assembled pipelines used on the offshore gas and oil producing facilities.

10.1.3 Safety assessment shall cover the accidents caused by the following impacts and loads:

extreme hydrometeorological conditions; seismic events;

hazardous geological phenomena on the seabed;

hazardous hydrological phenomena;

external impacts on pipelines;

internal and external corrosion;

processing equipment failures;

human errors during pipeline operation;

combinations of these events, phenomena and conditions.

10.1.4 The following hazards and their consequences shall be considered for the safety assessment:

errors in the pipeline design;

leakages in the pipeline;

damage and failures of the pipeline protection;

pipeline displacement relative to the location within the design project;

explosions;

fires;

combinations of these accidents;

other possible accidents.

10.1.5 Pipeline safety assessment shall be submitted to the Register:

for the personnel of the operating company and for population;

for the environment;

for objects and structures located in the areas of pipeline route and installation facilities.

10.2 TERMS, DEFINITIONS AND EXPLANATIONS

10.2.1 The main terms, definitions and explanations relating to general safety terminology are specified in **1.2**.

10.2.2 For the purpose of this Section the following additional definitions are used.

Accident means a hazardous technogenic accident that causes at an object, certain area or water area a threat to the human life and health and results in destruction of buildings, structures, equipment and transport means, in manufacturing or transport process irregularity, or environmental damage.

Accident on the pipeline means an accident on the pipeline route resulting in the emission or spillage under pressure of hazardous chemical or fire-hazardous substances and resulting in occurrence of technogenic emergency. Hereinafter, only an occurrence will be considered that might result in abnormal ingress of the conveyed hazardous substance (oil, oil products, condensate and gas) in the environment.

Risk analysis means a process of hazard identification and assessment of risk for individuals or groups of population, property or the environment. The risk analysis means use of all available information for hazard identification (detection) and assessment of risk of a certain event defined earlier (accident and emergencies involved) caused by these hazards.

Free-failure operation means capability of an item (object) to retain its serviceability during the specified period of time or until the completion of a certain work without forced breaks, e.g. for repairs.

Safety in emergency situations means condition of population protection, objects of national economy and environment against hazards in emergency situations.

Hazard identification means a process of hazard identification, recognition of its existence, as well as determination of hazard characteristics.

Accident initiating event means an event, occurrence or external condition creating on its own or in combination with other event, occurrences and external conditions a possibility of origination and evolvement of an accident.

Working order means a condition of an object, at which it complies with all the requirements of the normative and technical and/or design documentation.

Failure criterion of subsea pipeline means an indication or a combination of indications of the pipeline operable condition disturbance as specified in the normative and design documentation.

Quantitative risk indications are as follows:

individual risk means a frequency of individual injury as a result of hazardous effects (factors of danger) originating from emergency situations;

potential loss of life (PLL) means an expected number of people injured to a specified degree as a result of possible accidents during a certain period of time;

potential territorial risk means spatial and time frequency distribution of materialization of a hazardous effect of a certain level;

societal risk means a relation between the frequency of events and severity of their consequences expressed as data on frequency of hazardous events (F) at which there is a possibility to strike the number of people at a specified degree in excess of the number determined (N).

Reliability means a property of an object to retain with the time within the specified limits the values of the parameters characterizing capability to fulfill the required functions within the specified operating conditions and application conditions, maintenance, storage and transportation.

Hazard means an objectively existing possibility (probability) of a negative effect on the society, individual, environment, which can result in a loss or damage impairing the condition and giving undesirable dynamics or parameters to their development.

Hazard of technogenic nature means a condition specific to the technical system, industrial or transport object that realizes in the form of harm to the environment when it occurs or in the form of the direct or indirect damage to an individual and environment during normal operation of the objects.

Hazardous substances means flammable, oxidizable, combustible, explosive, toxic, highly toxic substances and substances causing hazard to the environment.

Failure means malfunction in serviceability of the object.

Risk assessment means a process of an extent of risk identification of a considered hazard to the health of individual, property or environment. Risk assessment includes the analysis of frequency of the risk occurrence, analysis of consequences and combination of both.

Damage means disturbance of the conveyed order of the object, with the serviceable condition being maintained.

Negligible risk means a degree of risk, above which measures shall be taken for elemination thereof.

Acceptable risk means the risk, which level is allowable and substantiated based on economic and social considerations. The risk of an industrial object (subsea pipeline) operation is acceptable, provided its magnitude is so insignificant that the society is prepared to run the risk to benefit from the object operation.

Serviceable condition means a condition of an object, at which values of all the parameters that characterize a capability to fulfill the specified functions are comply with the normative and technical documentation.

Risk means a combination of event probability and its consequences.

Accident scenario means a complete and formalized description of the following events: accident initiation event, accident process and emergency situation, losses in accident, including specific quantitative characteristics of the accident events, their space-time parameters and causal relationship.

Technogenic emergency situation means a condition where, as a result of occurrence of the technogenic emergency situation source at the object, in certain area or water area, normal conditions of life and activities of people are disturbed, their lives and health are threatened, damage is done to the national economy and environment.

10.3 BASIC PRINCIPLES

10.3.1 Subsea pipeline is an object of high risk (potentially hazardous object, hazardous production facility). Accidents on subsea pipelines are caused by an extremely wide spectrum of factors due to the environment and other objects.

10.3.2 Safety assessment is based on the assumption that design, calculations, manufacture, construction, operation and maintenance of the subsea pipelines shall comply with all the requirements of the RS normative documents and best applied technologies.

10.3.3 Safety shall be assessed at all stages of the subsea service life beginning from giving birth to an idea and concept of its creation.

10.3.4 For safety assessment a designer shall submit the following information:

environmental conditions;

functions, modes and specifics of the pipeline operation;

design impacts and loads;

drawings of the pipeline route, ballasting, underwater trenches, galvanic anode arrangement, shore approach structures, etc.;

hydraulic calculations, calculations of ballasting, material substantiation and pipeline wall thickness calculation, effectiveness of corrosion protection, weight of galvanic anodes, etc.;

information on associated structures and supporting facilities;

list and description of basic arrangements aiming at reducing probability of accidents;

description of measures aimed to reduce consequences of an accident;

acceptable risk criteria for personnel, population and environment; confirmation based on calculations that consequences of extreme environmental conditions and accident effects meet the adequate safety criteria.

10.3.5 Safety assessment is carried out in accordance with safety concepts based on the following principles or combinations thereof:

principle of unconditional priority of safety and health of people as compared to any other technical and economic benefits and advantages;

principle of risk acceptability, in compliance with which the low permissible and upper desirable risk levels, and within this range an acceptable risk level are

established with regard to the social and economic factors;

principle of the minimum hazard, in compliance with which the risk level is established as low as reasonably practicable;

principle of successive approximation to the absolute safety.

10.3.6 The ALARP ("as low as reasonably practicable") concept that materializes principle "to foresee and to prevent" is adopted in the SP Rules and in most of the international and national classification societies.

10.3.7 Risk analysis is an integral part of the safety control system, which aim is to prevent and reduce hazards to pipelines.

Risk analysis being the main link in provision of safety is based on the information collected and defines the measures on monitoring of the subsea pipeline safety.

10.3.8 Safety assessment of the subsea pipeline at all stages of design cycle shall be made for the purpose of selection of the most favorable design solution meeting the basic principles and requirements of safety. The result of this assessment shall confirm that correct decisions were made in design, which provide the required safety level and would not result later in a necessity of making significant modifications in design and construction due to non-compliance with the safety requirements.

10.3.9 Positive safety assessment of the subsea pipeline shall demonstrate an adequately low probability of human and financial losses, social and environmental risk. Safety assessment shall result in confirmation of the fact that the subsea pipeline complies with the criteria of sufficient (acceptable) safety.

10.4 BASIC REQUIREMENTS FOR RISK ANALYSIS

10.4.1 Risk analysis for the personnel, population and environment shall be mandatory for subsea pipelines.

Risk analysis may be carried out on its own or as a part of safety declaration of hazardous production facility. Its results shall be considered in safety assessment and expertise, shall be taken into account during technical and economic analysis, as well as during safety analysis and assessment of industrial objects and regions.

10.4.2 Risk analysis is a tool for detection and determination of hazards and risks. Risk analysis shall be aimed at justification of objective decisions on acceptable and achievable risk levels on the pipeline. This will enable to develop requirements and recommendations on the safety control.

10.4.3 The process of risk analysis shall contain:

planning and organization of work;

identification of hazards;

risk assessment;

elaboration of recommendations on reduction of risk levels (risk control).

Appropriate documentation shall be prepared for every stage of the risk analysis.

10.4.4 Planning and organization of work.

10.4.4.1 At the stage of work planning it is necessary: to describe the necessity of risk analysis;

to choose the system to be analyzed and provide its review in detail; to appoint the risk analysis performers;

to identify sources of information and provide availability of information on the system to be analyzed including decisions to assure its safety, as well as information on similar systems;

to assess limitations on initial data, financial resources affecting the scope and completeness of risk analysis;

to define the final target and tasks of the risk analysis;

to select and justify the risk analysis techniques;

to develop and substantiate the acceptable risk criteria.

10.4.4.2 For the purpose of selection and appointment of the risk analysis performers the necessary and possibility to involve experts, specialists from the design organizations and the RS representatives shall be studied.

10.4.4.3 At defining target and tasks of risk analysis all stages of the subsea pipeline life cycle (design, construction, commissioning, operation and possible modification and decommissioning) shall be reviewed.

10.4.4.4 While choosing risk analysis technique, it is necessary to take into account the set target and tasks, complexity of the processes under consideration, the availability and completeness of the initial data.

10.4.4.5 The acceptable risk criteria may be:

based on the normative and legal documentation;

established at the risk analysis planning stage with possible clarification in the course of stage completion or obtaining analysis results.

The main requirements for choosing the risk criterion are:

compliance with the best world practices and best applied technologies;

its validity and certainty.

10.4.5 Hazard identification.

10.4.5.1 The hazard identification task is detection, definition and maximum complete description of all possible hazards for the particular pipeline. Detection of the existing hazards is made on the basis of the information on the given object operational conditions, operation experience of the similar systems and expert data.

10.4.5.2 Hazards shall be identified systematically to ensure a full scope review and assessment of importance of all detected hazards. For the subsea pipelines the importance of hazards is evaluated by the presence of hazardous substances and their mixtures in the pipelines, potentiality of their uncontrolled leaks (outburst), possibility of ignition (explosion) source occurrence and external (technogenic and natural) impacts.

The importance of hazard identification stage lies in the fact that the hazards not detected at the identification

stage will not be later considered and not taken into account.

10.4.5.3 For the purpose of identification, analysis and control of the hazards associated with the subsea pipelines, regular and thorough recording of accidents shall be maintained aiming at minimizing the consequences of such accidents. The most hazardous accidents are damages and faults caused by the pipeline leaks due to breaks and fractures in the base metal of pipes and welds, corrosion wormholes, joint leaks, pipe wall thinning down to impermissible values, etc.

10.4.5.4 Information on the subsea pipeline accidents shall contain description of conditions at the beginning of the accident and measures of fighting against the accident taken to eliminate its consequences; information on development of accidents; physical and statistical models, etc.

10.4.5.5 The preliminary analysis of hazard identification permits to determine what components of the pipeline system require more careful analysis and what components are of lesser interest in terms of safety.

10.4.5.6 As a result of hazard identification, a list of undesirable events causing an accident is compiled. Hazard identification is completed with determination of further activities, namely:

whether or not to stop the further analysis because of hazard insignificance;

whether to make more thorough risk analysis;

elaborate recommendations on reduction of the hazard level.

10.4.6 Risk assessment.

10.4.6.1 At the stage of the risk assessment the hazards detected in the course of identification shall be analyzed in terms of their compliance with the acceptable risk criteria. In so doing, the acceptable risk criteria and results may be shown qualitatively as a text (tables) or quantitatively by calculation of risk indications (refer to Appendix 2).

Where there are grounds to believe that hazards and their associated consequences of events are insignificant or their probability is very doubtful, the simplified hazard assessment may be assumed and decisions to exclude them from further consideration may be taken.

10.4.6.2 In selecting methods of risk analysis the priority shall be given to the qualitative engineering methods for risk analysis based on the approved procedures, special auxiliary materials (e.g., detailed methodological guides) and practical experience of the experts. Along with that, qualitative methods for risk assessment may be very useful, and sometimes they are the only acceptable ones, e.g. for comparison of different design decisions and/or for comparison of importance of hazards of different origin, as well as for confirmation of results neutrality.

10.4.6.3 Risk assessment includes the frequency analysis of initial and intermediate events, analysis of intensity of hazardous effects and consequences of the events revealed and analysis of the result uncertainties.

For the purpose of the event frequency analysis and assessment, the following approaches are normally used:

statistical data on accidents and reliability of the subsea pipeline similar in design and operating conditions to the type considered are used;

logic methods of event tree analysis or fault tree analysis applied;

expert appraisal with consideration of the opinions of specialists in the area of subsea pipelines is performed.

10.4.6.4 It is recommended to use expert appraisals and risk ranking methods in case of statistical data lack. Where such approach is used, the events under consideration are subdivided by a probability, severity of consequences into several groups (categories, ranks) with risk assessment by combination of probability and severity, e.g. with high, intermediate, low and insignificant risk degree. Normally the high risk degree is unacceptable, the intermediate degree requires a complex of measures to be taken for reduction of risk, the low degree is recognized to be acceptable and insignificant degree is neglected (refer to Appendix 2).

10.4.6.5 The analysis of the accident consequences includes assessment of impacts on people, environment and third party property. Analysis of consequences shall consider assessment of physical and chemical characteristics of hazardous effects (fires, explosions, emissions of toxic substances). For this purpose, the tested accident models and criteria of damage to affected objects including the subsea pipeline itself shall be applied.

10.4.6.6 Environmental risk assessment includes calculation of the following indicators:

values of maximum design emissions of transported harmful substances into environment, their intensity and duration at accidents on pipeline sections considering the pipeline route, technical characteristics and operating modes under normal conditions of operation and failures of the leak monitor system and emergency shutdown system of pipage;

annual frequency of excess of the specified leakages (it is recommended to make calculation for excess of 0,5 t, 50 t, 500 t and 5000 t of harmful substance);

annual average of leak and emission frequency at pipeline leakage due to any reasons;

average values of leakages;

average total leakages;

Calculation of maximum leakages for all modes shall be combined with hydraulic calculations of pipelines or shall be carried out separately using tested hydraulic models.

10.4.6.7 In risk assessment uncertainty and accuracy of the results shall be analyzed. The main causes of uncertainties are insufficient information on subsea pipeline operating conditions, reliability of the equipment and components used, and a human factor, as well as assumptions in the accident models.

Analysis of uncertainties is transmission of the initial parameter uncertainties and assumptions used in risk

assessment into result uncertainties. The causes of uncertainty shall be identified and presented in the results.

10.4.7 Recommendations on risk reduction.

10.4.7.1 The final stage of the risk analysis is elaboration of recommendations on risk reduction (risk control).

Risk may be reduced due to measures either of technical or organizational nature, at that, during subsea pipeline operation the organizational arrangements may compensate a limitation of possible measures on reduction of hazard.

When measures on risk reduction are developed, account shall be taken of their effectiveness (influence on the level of safety) and possible limitations of the resources (both financial and material). Primarily, simple recommendations and measures that require less expenses shall be considered.

10.4.7.2 In all cases, the measures that reduce probability of an accident shall prevail over the measures that reduce accident consequences. Selection of measures to reduce a hazard has the following priorities:

.1 measures that reduce probability of accident occurrence including:

measures that reduce probability of fault occurrence;

measures that reduce probability of fault development into accident;

measures related to accident prevention and monitoring;

.2 measures that reduce severity of the accident consequences;

measures that provide change in the subsea pipeline conception or design, for example, selection of an appropriate pipe wall thickness, corrosion protection, rerouting etc;

measures dealing with organization, equipment and readiness of emergency services.

With equal possibility to implement the elaborated recommendations, priority shall be given to the accident prevention measures.

10.5 METHODS OF RISK ANALYSIS

10.5.1 Methods of risk analysis shall be selected, with regard to the purpose and tasks of analysis, adopted acceptable risk criteria, specific features of the subsea pipeline, nature of potential hazards.

Availability of the required and reliable information, resources allocated for the analysis, experience and qualification of the personnel performing the analysis, and other factors shall be considered.

10.5.2 Methods of risk analysis shall meet the following requirements:

to be scientifically and methodically grounded and consistent with its scope of application;

to give the results in such a form that allows understanding of the risk nature in the best possible way, develop and evaluate the most effective ways for the risk reduction;

to be repeatable and verified.

10.5.3 Generally, one or several methods of risk analysis described below shall be used at the hazard identification stage:

checklist;

"What-if...?";

combination of check list and "What-if analysis;

hazard and serviceability analysis;

failure type and consequences analysis;

failure and event tree analysis;

appropriate equivalent methods.

Brief information on the above methods of risk analysis and conditions of their application is specified in Appendix **3**.

10.5.4 Recommendations for selection of the risk analysis methods at different stages of activities and subsea pipeline operation (design, routing, commissioning and decommissioning, operation, modification) are shown in Table **10**.5.**4**.

The methods may be used individually or in combination. Qualitative methods may include quantitative risk criteria, based mainly on the expert appraisals, using such hazard ranking matrices, as "probability — severity of consequences" (refer to Appendix **2**). Complete quantitative risk analysis may include all the methods listed.

Table 10.5.4

Method	Stages of activity and functioning				
	Design	Arrangement and routing	Commissioning/ decommissioning	Operation	Modification
"What-if analysis	+	0	++	++	+
Checklist method	+	0	+	++	+
Hazard and serviceability analysis	++	0	+	+	++
Failure type and consequences analysis	++	0	+	+	++
Failure and event tree analysis	++	0	+	+	++
Quantitative risk analysis	++	++	0	+	++

0 — the least suitable method;
+ — recommended method;
++ — the most suitable method.

PART II. RISERS

1 GENERAL

1.1 SCOPE OF APPLICATION

1.1.1 The requirements of this Part cover production and export flexible risers of any type and configuration, which connect subsea production systems (SPS) and floating offshore oil-and-gas production units/ floating single point mooring (FPU/FSPM) or fixed offshore platforms (FOP) into an integrated subsea pipeline transport system.

1.1.2 SPS, including umbilicals pipeline end manifolds/subsea pipeline terminals, shall meet the requirements of Rules for the Classification and Construction of Subsea Production Systems (SPS Rules).

1.1.3 If FPU maneuvering (rotation) around the operation site is needed, risers shall be connected to the moored turrets. Where provision was made for the possibility to leave the operation site by FPU, risers shall be connected to the moored submerged buoys, including those with embedded turrets.

1.1.4 FPU/FSPM and their turrets shall meet the requirements of the Rules for the Classification, Construction and Equipment of Floating Offshore Oil-and-Gas Production Units (FPU Rules), while FOP shall meet the requirements of the Rules for the Classification, Construction and Equipment of Mobile Offshore Drilling Units and Fixed Offshore Platforms (MODU/FOP Rules).

1.1.5 The requirements of this Part do not apply to subsea hoses that shall meet the requirements of Section 6, Part VIII "Systems and Piping" of the Rules for the Classification and Construction of Sea-Going Ships.

1.1.6 The requirements of this Part may be applied to existing risers built without the RS technical supervision for the purpose of carrying out survey of technical condition and assessing the possibility of assigning the RS class.

1.1.7 The Register may approve risers built in compliance with other rules, regulations or standards alternatively or additionally to the requirements of this Part.

1.1.8 Design, construction and operation of risers shall meet the requirements of supervisory bodies.

1.1.9 Riser foundations in terms of the requirements to structural fitting on the seabed soil shall meet the requirements of Part IV "Foundations" of the SPS Rules.

1.1.10 In all other respects the requirements of **1.1.7** and **1.1.6**, Part I "Subsea Pipelines" shall be met.

1.2 DEFINITIONS AND ABBREVIATIONS

1.2.1 Definitions.

Flexible riser means a riser which allows large deflections from straightness without significant increase in bending stresses.

Hybrid riser means a riser which consists of pipes made of different structural materials.

Production riser means a vertical part of the subsea piping system, which connects subsea production systems with the well fluid gathering/treatment/storage systems on floating offshore oil-and-gas production units/ floating single point mooring (FPU/FPSM) or fixed offshore platforms (FOP).

Note. Production risers may be used for water/gas injection, gaslift, as well as for placing um-bilicals of the subsea production system control and monitoring facilities.

Riser tensioner system/Vertical motion compensator means a riser tensioner and rolling compensation system for floating offshore oil-and-gas production units/floating single point mooring (FPU/FPSM) and the riser.

Riser foundation means an appliance for fixing the riser comprising buoyancy structural components on the seabed soil.

Package riser means a riser comprising a package (batch) of parallel riser pipes and umbilicals.

Polymeric-metal riser means a riser with flexible polymer-metal pipe.

Composite material means a heterogeneous system composed of a polymeric matrix and filler (reinforcing material).

Swamp weight means a riser component having negative buoyancy, which is fixed to the riser for creating tensile forces.

Composite riser means a riser with a composite pipe consisting of an outer pressure sheath, inner tight liner and end fittings.

Riser system means a complex of additional systems, equipment and facilities, which ensure functioning of the riser (or several risers) as a complex pipeline transportation system.

Riser pipe section means an assembly unit of the riser pipe which includes connectors (end fittings) at the ends.

Static elastic line of the riser means a riser axial equilibrium line under the sole effect of gravity, buoyancy and static reaction forces from FPU/FSPM/FOP.

Riser pipe is means riser component forming a channel for transporting the well fluid, water or gas.

Export riser means a vertical part of the subsea piping system, which connects the well fluid offloading systems on floating offshore oil-and-gas production units/floating single point mooring (FPU/FPSM) or fixed offshore platforms (FOP) with the subsea piping systems.

Buoyancy element is a riser component having positive buoyancy which is fixed to the riser for creating tensile forces.

1.2.2 Abbreviations.

FOP — fixed offshore platform;

SP — subsea pipeline;

SPS — subsea production system;

FPU — floating offshore oil-and-gas production unit;

FSPM (*Floating Single Point Mooring*) — floating single point mooring.

1.3 CLASSIFICATION

1.3.1 The class notation assigned by the Register to the riser consists of the character of classification, distinguishing marks and descriptive notations defining its design and purpose.

1.3.2 The character of classification assigned by the Register to the riser consists of the following distinguishing marks: R⊛, R★ or R★.

Depending on the supervisory body under which supervision the riser has been constructed, the character of classification is established as follows:

risers constructed in accordance with the RS rules and under the RS technical supervision, are assigned a class notation with the character of classification R⊛;

risers constructed in accordance with the rules and under supervision of a classification society or national supervisory body recognized by the Register are assigned a class notation with the character of classification R★;

risers constructed without supervision of the classification society or national supervisory body recognized by the Register are assigned a class notation with the character of classification R★.

See Circular 1216

1.3.3 Three groups of additional distinguishing marks are added to the character of classification:

1.3.3.1 Additional distinguishing marks corresponding with the riser purpose:

P — production riser, including risers for water/gas injection;

E — export riser.

1.3.3.2 Additional distinguishing marks corresponding with the type of well fluid produced/transported:

G — gas;

L — liquid or a two-phase transported medium, including water.

1.3.3.3 Additional distinguishing marks corresponding with the riser pipe material:

S — steel;

T — titanium alloy;

A — aluminium alloy;

C — composite;

H — hybrid riser;

F — polymeric-metal pipe.

1.3.4 The following descriptive notations shall be added to the character of classification and distinguishing mark:

1.3.4.1 For production of well fluid with corrosive characteristics (sulphurated hydrogen) — corrosion-active.

1.3.4.2 The rest descriptive notations are the following:

geographical area;

type of transported medium; working pressure, in MPa;

maximum temperature of transported medium, in °C;

nominal riser pipe diameter, in mm/number of pipes, pcs.

For example, R★P **L F**, corrosion-active, **Barents** sea, **19** MPa, **30** °C, **300/1.**

1.3.5 Assignment of the RS class means confirmation of the riser compliance with the applicable requirements of the SP Rules and acceptance of the riser under technical supervision for the specified period of time with performance of all surveys required by the Register to confirm the class. Assignment of the RS class to the riser is confirmed by issuing a standard Classification Certificate.

1.3.6 In all other cases, riser classification requirements shall comply with **1.3.5** to **1.3.12**, Part I "Subsea Pipelines".

1.4 SCOPE OF SURVEYS

1.4.1 Technical supervision of risers consists of checking the riser compliance with the RS requirements during:

review and approval (agreement) of technical documentation;

survey of the items of technical supervision during manufacture, construction, operation, including modification and repairs.

1.4.2 The RS activities pertaining to classification of risers, technical supervision at the stages specified in **1.4.1** shall be performed based on the contracts with the clients.

1.4.3 During technical supervision of the risers Reports on survey (upon completion of the construction, annual/intermediate/special survey) and other documents, if necessary, shall be issued by the Register.

1.4.4 General requirements for riser surveys shall meet the requirements of **1.4.1** to **1.4.4**, Part I "Subsea Pipelines".

1.4.5 It is recommended to agree dates of the RS classification item periodical surveys at the specific

offshore oil-and-gas field: subsea pipelines, risers and subsea production systems.

1.5 TECHNICAL DOCUMENTATION

1.5.1 Prior to commencement of the riser construction, technical documentation which allows ascertaining that the requirement of the RS rules for this riser are met, shall be submitted to the Register for review.

The scope of the riser/riser system technical documentation is specified in **1.5.2** to **1.5.8**.

1.5.2 General:

.1 riser specification;

.2 riser drawings (set up diagram, standard components and connectors);

.3 operation area engineering survey report with indication of the current, wave and soil parameters (when riser foundations to be installed on the seabed are used);

.4 list of components and equipment with indication of the main technical characteristics, manufacturer and approval by the Register or another classification/supervisory body.

1.5.3 Documentation on riser pipes, including connectors:

.1 drawings of riser pipe sections, including those with end fittings (in case of a detachable connection);

.2 specification for the pipe delivery or technical requirements for the pipe purchasing, certificates for riser pipes and test reports thereof;

.3 drawings of the riser pipe connectors and the riser/riser pipe connection to FPU/FSPM/FOP and SPS;

.4 drawings of the riser pipe welded joints, edge preparation for welding, description of welding modes (in case of welded joints);

.5 types and scope of tests;

.6 methods and scope of non-destructive testing;

.7 information on the medium to be transported;

.8 hydraulic calculations of an equilibrium configuration of a riser pipe (the static elastic line position) and the positions of maximum allowable relative displacements of the upper and lower riser parts according to three linear degrees of freedom (vertical displacement, longitudinal displacement and transverse horizontal displacement).

1.5.4 The following calculations and other design documentation shall be submitted together with the drawings and information according to **1.5.3**:

.1 design and guidelines for offshore riser installation;

.2 calculation of the riser static equilibrium (determining static elastic line of the riser);

.3 calculation of the riser dynamics under the effect of current, waves and FPU/FSPM/FOP displacements, as well as interaction with SPS or seabed soil.

.4 calculation of the riser pipe wall thickness;

.5 calculation of fatigue strength;

.6 calculation of the riser strength during installation.

1.5.5 Documentation on the riser component buoyancy:

.1 calculation of the component buoyancy;

.2 arrangement plan of buoyancy elements;

.3 buoyancy element material certificates;

.4 buoyancy element drawings.

1.5.6 Documentation on swamp weights/riser foundations:

.1 calculation of swamp weight in water or determination of design load on the riser foundation;

.2 arrangement plan of the swamp weights/riser foundation base;

.3 the swamp weight/the riser foundation material certificates;

.4 the swamp weight/riser foundation drawings.

1.5.7 Documentation on the riser operation monitoring and control facilities;

1.5.8 Documentation on protective coatings and cathodic protection/galvanic anode system.

1.5.9 Documentation on riser risk analysis.

1.5.10 In all other respects the requirements for riser technical documentation shall comply with **1.5.11** to **1.5.19**, Part I "Subsea Pipelines".

2 DESIGN LOADS

2.1 Design loads acting on risers shall take into consideration the following impact loads:

.1 pressure on the riser pipe wall due to the combined effect of internal pressure of the transported fluid or gas and external hydrostatic pressure of water;

.2 transverse load due to the sea current, whose velocity and direction are generally depth stratified;

.3 transverse load due to the wave particle flow (depending on depth of riser installation and waving parameters);

.4 temperature loads due to the difference in the transported medium temperatures at the initial and end points of the riser;

.5 gravity and buoyancy of all riser components, including buoyancy elements/swamp weight;

.6 reactions in the riser connection to FPU/FSPM/FOP induced by their deviation from the equilibrium condition due to the combined effects of waves, wind, surface sea current and operation of tensile legs and dynamic positioning and mooring systems;

.7 reactions of members in way of the riser connection to SPS (riser foundation) or interaction with seabed soil, including those induced by seismic loads.

2.2 In addition to the loads specified in 2.1 the riser shall be tested for the effect of loads acting during the riser installation and testing. Unless otherwise specified, each design load shall be multiplied by significance factor γ in accordance with Table 2.1, Part I "Subsea Pipelines".

2.3 Design pressure acting on the riser pipe wall p_0, in MPa, is determined by Formula (2.2.1), Part I "Subsea Pipelines", where:

internal pressure p_i, in MPa, is determined by the riser hydraulic calculation and is the riser height variable;

the value of $p_{g\,min}$, in MPa, is determined by Formula (2.2.2), Part I "Subsea Pipelines" where the value of d_{min}. shall be taken as the minimum distance between the riser top and the still water level, taking into account tides and storm surge effects with 10^{-2} 1/year probability.

2.4 Transverse linear sea current load on the riser particle $F_{c,r}$, in N/m, shall be determined by the formula

$$F_{c,r} = 0{,}95\rho_w a_{cr} D_r^2 + 0{,}7\rho_w (V_{cr} - V_c)|V_{cr} - V_c| D_r, \quad (2.4)$$

where D_r = riser external diameter, in m;
a_{cr} = riser particle acceleration due to the current, in m/s^2;
V_{cr} = riser particle velocity due to the current, in m/s;
V_c = design current velocity (with due account for the direction) at the given depth, in m/s which is determined for the given geographical region with 10^{-2} 1/year probability based on the engineering survey;
ρ_w = sea water density, in kg/m^3.

2.5 Transverse linear wave load on the riser particle $F_{w,r}$, in N/m, shall be determined by the formula

$$F_{w,r} = 0{,}8 c_a \rho_w a_{wr} D_r^2 + 0{,}5 c_x \rho_w (V_{wr} - V_w)|V_{wr} - V_w| D_r, \quad (2.5\text{-}1)$$

where a_{wr} = riser particle acceleration due to waves, in m/s^2;
V_w = water particle velocity due to waves at the given depth, in m/s, which is determined for the given geographical region with 10^{-2} 1/year probability based on the engineering survey (refer to Appendix 5);
V_{wr} = riser particle velocity due to waves, in m/s;
c_a and c_x = inertia and velocity resistance factors determined according to diagram in Fig. 2.5 depending on the Keulegan-Carpenter number KC (refer to Formula (2.5-2)).

$$KC = V_w \tau / D_r \quad (2.5\text{-}2)$$

where τ = wave period, in s, determined for the given geographical region with 10^{-2} 1/year probability based on the engineering survey (refer to Appendix 5).

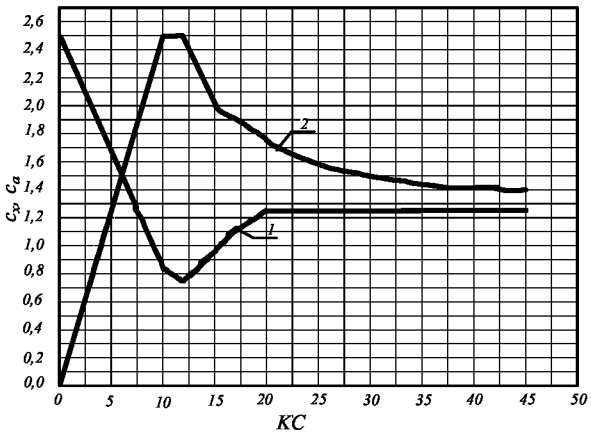

Fig. 2.5
Dependence of the velocity c_x (*1*) and inertia c_a (*2*) resistance factors from the Keulegan-Carpenter number

2.6 Reactions of members in way of the riser connections to FPU/FSPM/ FOP and SPS (seabed soil) are determined for the FPU/FSPM/FOP deviations from the equilibrium condition due to the combined effects of waves, wind, surface sea current with 10^{-2} 1/year probability and effectively functioning positioning system.

2.7 Design external loads acting on the riser shall be determined for the most unfavorable combination of loads. Methods of assigning design loads, including those which have been developed based on the national and/or international rules, standards and regulations, shall be approved by the Register during consideration of the riser technical documentation.

2.8 Distribution of design loads acting on risers based on physical phenomena determining their occurrence shall comply with 2.1.2 to 2.1.6, Part I "Subsea Pipelines".

3 REQUIREMENTS FOR DETERMINING RISER DYNAMIC RESPONSE TO ENVIRONMENTAL CONDITIONS AND LOADS

3.1 GENERAL

3.1.1 Strength analysis of risers shall consist of the following stages:

.1 determining the riser elastic static line in the equilibrium condition;

.2 determining the production riser dynamic response to the effect of current, waves, as well as the effects of interaction with SPS (or seabed soil) or FPU/ FSPM/FOP, when displaced;

.3 testing local strength and stability of the riser.

3.2 DETERMINING RISER ELASTIC STATIC LINE

3.2.1 The riser elastic static line shall be determined according to the methodology approved by the Register using numerical methods.

3.2.2 In the first step the riser pipe wall thickness t_r, in mm, shall be determined as:

.1 for metal riser pipe

$$t_r = \frac{p_0 D_r}{2R_e} + c_1 \qquad (3.2.2)$$

where p_0 = design pressure in the riser pipe determined in accordance with 2.3, in MPa;
D_r = external diameter of the riser pipe, in m;
R_e = the minimum yield stress of the riser pipe material, in MPa;
c_1 = corrosion allowance which is determined as:
c_1 = $0{,}2T$ — for steel riser pipes, in mm;
where T = planned service life of the riser, in years;
$c_1 = 0$ — for riser pipes made of titanium and aluminium alloys.

.2 composite riser wall thickness to be determined in compliance with Section **2** of Appendix 9.

3.2.3 The riser elastic static line shall be calculated with due account for the following impact loads:

gravity;

buoyancy;

temperature loads;

reactions in the riser connection to SPS or interaction with the seabed soil; reactions of the riser connection to FPU/FSPM/FOP in still water.

3.2.4 Forces of gravity and buoyancy shall be calculated separately for the main riser pipe, swamp weight, buoyant elements and other riser system components with due account for their mass and volume. The following generalized stiffnesses for the metal riser pipes shall be used in the elastic static line calculations:

$$C_L = 0{,}78E(D_r^2 - D_{int,r}^2) \text{ — longitudinal stiffness;} \qquad (3.2.4\text{-}1)$$

$$C_B = 0{,}05E(D_r^2 - D_{int,r}^2) \text{ — bending stiffness;} \qquad (3.2.4\text{-}2)$$

$$C_T = 0{,}1E(D_r^2 - D_{int,r}^2) \text{ — torsional stiffness,} \qquad (3.2.4\text{-}3)$$

where E = Young's modulus of the riser pipe material, in MPa;
D_r = external diameter of the riser pipe, in m;
$D_{int,r}$ = internal diameter of the riser, in m.

The respective generalized stiffnesses for composite risers are specified in **1.1.6** of Appendix 9.

3.2.5 Calculation of elastic static line shall be carried out using numeric methods with due account for large displacements (geometrical non-linearity). The riser pipe wall thickness, buoyancy- and swamp weight parameters, other riser system component parameters shall be selected to the intent that all riser sections are tensioned to avoid general buckling of the riser pipe.

3.3 DETERMINING DYNAMIC RESPONSE

3.3.1 Dynamic response of the riser shall be determined according to the methodology approved by the Register using numeric methods. Elastic static line of the riser shall be taken as the riser initial position. The following environmental loads shall be taken into account in dynamic calculation:

gravity (similar to the elastic static line calculation) and added masses of water;

buoyancy (similar to the elastic static line calculation);

temperature (similar to the elastic static line calculation);

hydrodynamic due to the current, including vortex-induced vibration;

hydrodynamic due to the water wave motion;

reactions to the riser connection to SPS or interaction with seabed soil;

reactions in the riser connection to FPU/FSPM/FOP induced by their deviation from the equilibrium condition due to the combined effects of waves, wind, surface sea current and operation of tensile legs and dynamic positioning and mooring systems.

3.3.2 When considering the riser-FPU/FPSM/FOP interaction availability of the riser tensioner system and/or vertical motion compensators shall be taken into account.

3.3.3 It is recommended to use a method of **3**-D mathematical simulation of the riser-FPU/FSPM/FOP joint dynamics that shall result in the total maximum values of internal forces in the riser, namely: axial force, bending and torsional moments.

3.3.4 The riser pipe wall thickness shall be such as to ensure that the following conditions are met in all cases of dynamic calculation:

.1 absence of the riser pipe global buckling;

.2 meeting the maximum stress requirement:

$$\sigma_{max} \leqslant 0{,}5R_e, \quad (3.3.4)$$

where σ_{max} = the maximum von Mises stress (for metal riser pipes);

.3 meeting the riser pipe local buckling requirements:

for metal riser pipes in accordance with 3.4.2, Part I "Subsea Pipelines" with the safety factor n_c = 2,0;

for composite riser pipes — refer to Section 4 of Appendix 9;

for polymeric metal riser pipes — refer to 3.8, Part I "Subsea Pipelines".

.4 meeting the welded joint fatigue strength requirements (for metal riser pipes).

3.4 LOCAL STRENGTH CRITERIA OF RISER PIPES

3.4.1 Metal riser pipe.

The resultant internal force values shall be used in determining the local strength criterion of riser pipes in form of the maximum equivalent stresses σ_{max}, in MPa

$$\sigma_{max} = 0{,}7\sqrt{(\sigma_1-\sigma_2)^2 + (\sigma_2-\sigma_3)^2 + (\sigma_1-\sigma_3)^2} \quad (3.4.1)$$

where σ_1, σ_2, σ_3 = main stresses, in MPa.

In this respect the provisions of Formula (3.3.4) shall be met.

3.4.2 Composite riser pipes.

The requirements to local strength criteria of composite riser pipes shall comply with Section 1 of Appendix 9.

3.4.3 Polymeric-metal riser pipes.

The requirements to local strength criteria of polymeric-metal riser pipes shall comply with 3.8, Part I "Subsea Pipelines".

4 MATERIALS

4.1 GENERAL

4.1.1 Materials and products used in manufacture of risers and/or riser systems shall be surveyed by the Register. The general provisions regulating the scope and procedure of technical supervision of materials and products are specified in Section 5, Part I "General Regulations for Technical Supervision" of Rules for Technical Supervision During Construction of Ships and Manufacture of Materials and Products for Ships and in Section **1**, Part XIII "Materials" of Rules for the Classification and Construction of Sea-Going Ships.

4.1.2 The materials for metal riser pipes subject to the RS technical supervision, shall be produced by the manufacturers recognized by the Register and have the Recognition Certificate for Manufacturer (СПИ) (form 7.**1**.**4**.**1**).

4.1.3 Composite riser pipes and polymeric metal riser pipes shall be approved by the Register with the issue of Type Approval Certificate (СТО) (form 6.8.**3**).

4.1.4 Production requirements for materials and products which contain adequate information needed for the product ordering, manufacture or acceptance, shall be submitted to the Register for approval in form of specifications/technical requirements as part of technical documentation on risers (refer to1.5.**3**).

4.1.5 General requirements for the RS survey and technical supervision of the riser pipe materials shall comply with **4.2.1** and **4.2.2**, Part I "Subsea Pipelines".

4.2 METAL RISER PIPES

4.2.1 Steel riser pipes shall meet the requirement of **4**.5, Part I "Subsea Pipelines".

4.2.2 Riser pipes made of another metal or alloy (aluminium and titanium alloys) are subject to special consideration by the Register.

4.3 RISER PIPES OF COMPOSITE MATERIALS

4.3.1 Terms and definitions.

In addition to **1**.2 of this Part the following terms and definitions for the riser pipes made of composite materials have been introduced:

Reinforcing material means the composite ply component (fabric, tape, roving, fiber, etc.), intended to ensure its stiffness and strength.

Liner means the tight (usually made of metal) ply of the composite riser pipe, which is in contact with the transported medium.

Matrix means the cured polymer material which provides compatibility of reinforcing pliers of composite material.

Orthotropy means special case of anisotropy, which is characterized by the existence of **3** mutually perpendicular planes of material symmetry.

De-lamination means the separation or loss of bonds of plies of material in a laminate.

Ply means the basic building block of a composite material representing one layer of reinforcing material soaked in bond and cured.

Reinforcement structure means the sequence of orientation of pliers in a composite laminate in relation to the longitudinal axis of the composite riser pipe section.

4.3.2 General.

4.3.2.1 Selection of materials shall be carried out at the design stage of the composite riser pipe system to ensure its integrity, reliability and durability, considering the potential changes of operational conditions and material properties during the design riser service life and operating conditions, including the preliminary stages of the riser storage, transportation and installation.

4.3.2.2 The composite riser pipe pressure sheath shall be made of composite pliers. These pliers shall ensure structural and technological strength for transporting media with the prescribed parameters under the effect of design loads.

The tight inner liner and end fittings shall be manufactured of steels meeting the requirements of **4**.5, Part I "Subsea Pipelines".

4.3.2.3 All the materials used in the composite riser systems shall be certified for application in the corresponding environment (seawater) and the transported (natural gas, oil, etc.) media within the range of operating pressures and temperatures.

4.3.2.4 Service life of the composite riser shall be specified taking into account the allowance for degradation of the mechanical properties of the material during the riser long-term service.

4.3.3 Composite materials.

4.3.3.1 The nomenclature of the RS-controlled technological characteristics of the riser pipe pressure sheath manufacturing is specified on the assumption of the following range of parameters:

.1 material composition:

grade and type of reinforcing material (fiber, roving, tape, fabric);

type of fabric texture;
type of bond (epoxy, polyester, etc.);
grade of bond;
.2 production properties:
manufacturing method;
curing temperature;
curing pressure;
curing behaviour;
method of controlling the reinforcing material orientation;
method of controlling weight/volume content of the reinforcing material.

4.3.3.2 Nomenclature of the RS-controlled properties of composite pliers used in the manufacture of the composite riser pipe pressure sheath is specified on the assumption of the following range of parameters.

.1 mechanical properties:
moduli of elasticity in the direction of axes 1, **2** and **3**;
shear modulus within the reinforcement plane;
through thickness shear moduli within planes 1-**3** and **2-3**;
Poisson's Factors within planes 1-**2**, 1-**3** and **2-3**;
ultimate tensile strength in the direction of axes 1, **2** and **3**;
ultimate compressive strength in the direction of axes 1, **2** and **3**;
ultimate shear strength within the reinforcement plane;
through ultimate thickness strength within planes 1-**3** and **2-3**;
factor of the direct stress component interference;
.2 physical properties: density;
linear factors of thermal expansion in the direction of axes 1, **2** and **3**;
Factors considering the ambient humidity impact on the composite ply properties in the direction of axes 1, **2** and **3**;
.3 other properties:
chemical resistance to the environment and the transported media;
ageing;
creeping;
endurance;
acceptable defects.

4.3.4 Tests of composite riser pipes.

4.3.4.1 Tests of composite riser pipes are conducted to the extent of:
the type tests during the RS surveys of the manufacturer for issuing the Type Approval Certificate (CTO) (form 6.8.**3**);
the tests during the composite riser pipes manufacture.

4.3.4.2 Type tests of composite riser pipes.

4.3.4.2.1 Type tests of composite risers are conducted according to the program approved by the Register. The program shall be based on the requirements of this section, national and/or international standards.

4.3.4.2.2 Type tests are conducted to confirm the basic design parameters of the risers of a certain dimension-type series, which range shall be determined taking into account the following:
internal/external diameter;
number and orientation of the composite pliers;
grade of reinforcing material;
grade of bond;
method of manufacture;
curing temperature;
curing pressure;
curing behaviour;
liner structure;
internal/external temperature of the medium;
operational conditions and service life.

4.3.4.2.3 Each type of the composite riser pipe shall pass type tests, which are generally conducted to the fracture of specimens, and shall include, as a minimum, the following:
internal pressure burst tests;
hydrostatic buckling tests;
tension tests;
torsion resistance tests.

4.3.4.2.4 Three specimens for each type test are sampled from each type of the composite riser pipe.

4.3.4.3 Tests during manufacture of the composite riser pipes.

4.3.4.3.1 Tests during manufacture of the composite riser pipes are conducted in compliance with the requirements of this section according to the programme approved by the Register and developed on the basis of the national and/or international standards.

4.3.4.3.2 Each composite riser after manufacture shall be subjected, as a minimum, to:
drift tests;
non-destructive test to determine the area of embedded flaw;
hydrostatic internal pressure tests.

4.4 POLYMERIC-METAL RISER PIPES

4.4.1 Terms and definitions related to polymeric-metal riser pipes are in compliance with the terms specified in **3**.8, Part I "Subsea Pipelines".

4.4.2 Polymeric-metal riser pipes and their end fittings shall meet the requirements of **4**.6, Part I "Subsea Pipelines".

4.4.3 Testing requirements for polymeric-metal riser pipes shall comply with **4.2.4**, Part I "Subsea Pipelines".

5 CORROSION PROTECTION

5.1 The external corrosion protection requirements to metal riser pipes, as well as metal connectors (end fittings) of polymeric-metal pipes and composite riser pipes shall comply with Section 7, Part I "Subsea Pipelines", as applicable.

5.2 For steel riser pipes and metal components of polymeric-metal pipes (end fittings and carcass) transporting corrosion-active media, provision shall be made for measures specified in 7.**2**, Part I "Subsea Pipelines".

6 RISER CONSTRUCTION, INSTALLATION AND TESTING

6.1 Prior to construction and installation of a riser/riser system the Register shall review and approve technical documentation specified in 1.5.2 to 1.5.8, as well as design process documentation on the following:

.1 pre-assembly (manufacture) of the riser pipe/riser pipe section;

.2 manufacture of buoyancy elements, swamp weight and riser foundation (for this purpose refer to 1.1.9);

.3 storage, transportation and handling of the riser components specified in **6.1.1** and **6.1.2**;

.4 stages of the whole riser system pre-assembly (manufacture), including hybrid risers and package risers;

.5 requirements to the riser/riser system installation and connection to the FPU/FPSM/FOP or SPS systems and facilities.

6.2 The scope and procedure of the RS technical supervision is prescribed by the List of items of the RS technical supervision during construction and installation of risers, which is developed by the factory and approved by the RS Branch Office performing the technical supervision. The List (or any other interchangeable document: inspection test plan, quality plan, etc.) is drawn up on the basis of the design and process documentation approved by the Register and with due account for Nomenclature of items of the RS technical supervision of subsea pipelines and risers (refer to **1.6** of the SP Guidelines).

6.3 The riser pipe shall be provided with shut-off valves both on the respective SPS component and on FPU/FSPM/FOP.

6.4 When steel riser pipes are used, the requirements for welded joints shall comply with Section 5, Part I "Subsea Pipelines".

6.5 Installation and testing of risers shall be conducted with due regard to the conclusions and recommendations obtained upon results of risk analysis of the above processes, based on the requirements of Section 10, Part I "Subsea Pipelines".

6.6 The riser system design shall provide for the measures aimed at maintaining the required axial tensile stress in the riser pipe in order to avoid the occurrence and development of unallowable bending strains.

6.7 The design and guideline for marine operations for the riser/riser system installation in the operation field is subject to special consideration by the Register. Marine operations for delivering the riser components/riser system components to the installation field shall meet the requirements of the Rules for Planning and Execution of Marine Operations.

6.8 The riser shall be pressure tested after its complete installation and connection to the FPU/FSPM/FOP and SPS systems and facilities. During the riser pipe manufacture at the pre-manufacture stage the riser pipe hydraulic strength testing prior to the riser installation is allowed as agreed by the Register.

6.9 Risers intended for transportation of fluid media shall be pressure tested by hydraulic method. Risers intended for transportation of gaseous media are generally tested proceeding from the following conditions:

strength tests are conducted by hydraulic method;

leak tests are conducted by hydraulic method. It is allowed to perform leak test by pneumatic method.

6.10 Pressure tests are conducted in accordance with the program approved by the Register. The program shall include: See Circular 1216

method and rate of pressurization;

description and arrangement diagram of measuring devices;

method and rate of pressure relief;

dewatering and drying method;

emergency and safety procedures and precautions.

6.11 The riser pipe shall be hydraulic strength tested by test pressure equal to at least 1,25 times working pressure. When testing the riser pipe after installation the maximum permissible environmental loads acting on the riser during the tests (waves, current, displacements of the riser connections to FPU/FSPM/FOP or SPS) shall be agreed upon with the Register. The test pressure holding time shall be not less than 12 h.

6.12 During the hydraulic strength tests the total stresses in the steel riser pipe shall not exceed 0,95 of the pipe material yield stress. The strength requirements for polymeric-metal riser pipes and polymeric composite riser pipes during the hydraulic strength tests shall comply with **3.8**, Part I "Subsea Pipelines" and Appendix 9.

6.13 Leak tests shall be carried out after the strength testing using the test pressure equal to 1,1 times the working pressure. Holding time is 12 h. The riser shall be considered as having passed the leak test, if no leaks are detected over the test period, and the pressure variations do not exceed $\pm 0{,}2$ % under continuous monitoring of pressure and temperature values every 15 min.

6.14 When meeting the requirements of this Section and following the positive results of all surveys prescribed by the List of items of the RS technical supervision (refer to **6.2**) in compliance with **1.3** the riser/riser system is assigned the RS class that means acceptance of the riser/riser system under the RS technical supervision.

7 RISER MAINTENANCE AND REPAIR

7.1 GENERAL

7.1.1 General requirements for operation maintenance of risers shall comply with 9.1.1, Part I "Subsea Pipelines", as applicable.

7.1.2 The owner/operator of the subsea pipeline transport system comprising risers establishes the procedure for inspections, examinations and riser maintenance regulations, which specify their frequency and scope, including the scope of initial, periodical, special inspections and examinations and methods of their performance (in-line inspection, measurements of the external defects, etc.), as well as allowable defect sizes. It is recommended to harmonize the riser owner's system of examinations and studies with the RS system of periodical surveys (refer to 7.2.1). For this purpose the availability among the field facilities of other RS-classed items requiring similar surveys shall be considered.

7.1.3 The document reflecting the provisions specified in 7.1.2 (operation regulations, factory specification, etc.) is submitted to the Register for review prior to accept the riser/riser system in operation.

7.1.4 General requirements for periodical examinations and studies of risers shall comply with 9.1.3 and 9.1.4, Part I "Subsea Pipelines", as applicable.

7.2 TECHNICAL SUPERVISION OF RISERS IN OPERATION

7.2.1 Risers classed with the Register shall be operated under the RS technical supervision in the form of periodical surveys. The Register may apply to the requirements of 1.4.3.2 — 1.4.3.4 and 1.4.4, Part I "Subsea Pipelines" as the general requirements for riser surveys.

7.2.2 The RS surveys aimed at assessing technical condition and ensuring safe operation of risers in the future, as well as at scheduling maintenance of risers, shall include:

.1 survey of underwater and above water (if there are riser sections above water) parts of risers, including monitoring of:

general condition of structures, systems, equipment and facilities of the riser/riser system;

riser pipes and umbilicals;

riser connections to the SPS and FPU/FSPM/FOP components, including tension system, angular and vertical motion compensators, on turrets or submerged buoys;

condition of corrosion-protection coating and cathodic protection/galvanic anode system;

condition of buoyancy elements/swamp weights and their connectors.

.2 in-line inspection and/or external non-destructive testing of the riser pipe, connectors and end fittings;

.3 measuring thickness of the riser pipe wall and other structures and facilities (e.g., buoyancy module);

.4 measuring thickness of corrosion-protection coatings and localizing damaged corrosion-protection and insulation coatings;

.5 measuring cathodic potential of the riser metal components protected against electrochemical corrosion;

.6 surveys and inspections of umbilicals, automation and alarm systems;

.7 surveys of valves (may be performed during the surveys of SPS and FPU/FSPM/FOP, when installing fittings on these items).

7.2.3 Hydraulic tests of the riser pipes may be performed upon the RS request, when surveys specified in 7.2.2.2 and 7.2.2.3 have not been carried out (have been carried out incompletely), or after termination of the riser service life specified in the design.

7.2.4 Survey of the riser connections to the SPS or FPU/FSPM/FOP components on agreement with the Register may be performed during periodical surveys of the FPU/FSPM/FOP (including turrets and submerged buoys), and SPS (including riser foundations and connections to the SPS components).

7.2.5 Frequency of the Register surveys specified in 7.2.2 shall be based on that specified in 1.4.4, Part I "Subsea Pipelines" and shall be:

for above water parts of risers/riser system — once a year;

for subsea part of risers/riser system — once every 2 years;

for cathodic protection/galvanic anode system — once every 3 to 5 years;

for in-line inspection and/or non-destructive testing — in compliance with the Register, but not less than once every 3 years.

7.2.6 Inspections and surveys of the underwater part of riser/riser system shall be performed by divers or by means of remote control/autonomous unmanned submersibles.

7.2.7 Surveys specified in 7.2.2 shall be carried out with participation of firms recognized by the Register and having the Recognition Certificate (СП) (form 7.1.4.2).

7.2.8 The riser/riser system defects, which have been identified as the result of surveys performed, shall be checked for compliance with the allowable defect values on the basis of the RS-approved regulations (refer to 7.1.3) or the RS-recognized rules, standards and regulations.

7.2.9 In the scope of periodical surveys the Register shall approve the following calculations prepared by the owner/operator:

allowability of the minimum identified thickness of the riser pipe wall for further sevice;

assessment of corrosive wear rate of the riser pipe;

residual service life of the riser pipe;

allowable working pressure value;

as well as the plan of actions to ensure safe operation of the riser in the future.

7.2.10 Proceeding from the results of surveys performed the Register issues standard reports on the basis of which the riser class is assigned/confirmed given the positive survey results.

7.2.11 After the effect of accidental (emergency) loads acting on the riser subject to the RS technical supervision occasional survey shall be carried out, based on which results the documents specified in 7.2.8 and 7.2.9 shall be submitted to the Register for approval. Actions taken by the owner/operator based on the results of studies for further operation shall be agreed with the Register.

7.3 RISER REPAIR

7.3.1 Design process documentation on scheduled repairs or repairs after the effect of accidental (emergency) loads shall be approved by the Register.

7.3.2 The riser repairs shall be performed under the RS technical supervision based on the approved technical documentation which considers, inter alia, the last survey results according to 7.2.2.

7.3.3 The Register shall survey all repaired riser sections at the next periodical survey.

7.3.4 Upon completing the repairs the owner/operator shall prepare and submit to the Register the documents conforming safe operation of the riser/riser system for approval (refer to 7.2.9).

APPENDIX 1

RECOMMENDATIONS ON PROVISION OF RELIABILITY AND SAFETY OF SUBSEA PIPELINES ON SEABED SOIL

1 GENERAL

1.1 At the current level of technical development of subsea pipeline systems a probability of their damage during construction and operation due to various causes may not be excluded. The following may be referred to the main causes:

pipeline vibration and movement under the effect of hydrodynamic factors;

physical damages of subsea pipelines and their coatings by anchors, trawls, scrapers, vessel keels, ice formations, etc.;

external and internal corrosion (refer to Section 7, Part I "Subsea Pipelines");

improper ballasting of the pipeline (refer to Section 6, Part I "Subsea Pipelines");

weld defects of the pipeline base metal (refer to Section 5, Part I "Subsea Pipelines");

subsea pipeline buckling on the seabed soil (refer to Section 3, Part I "Subsea Pipelines");

pipeline free spans in the area of the seabed soil erosion;

inadequate monitoring of the subsea pipeline condition during construction and operation (refer to Section 9, Part I "Subsea Pipelines").

The types of subsea pipeline damages are breaks and cracks on the pipe base metal and on welds, through corrosion flaws, joint leakages, thinning of the pipe wall to unacceptable limits in places of abrasion against the seabed soil, high corrosive wear, dents, discontinuity of protective coatings, etc. The most severe consequences of the subsea pipeline damages are leakages and emergency spills of oil and oil products, condensate, gases and liquefied gases in case of seal failure.

1.2 Seabed soil may be washed out under the pipeline due to erosion processes caused by waves and currents, lithodynamic processes of seabed shape changes, which may result in the pipeline sagging at long distances. An opposite phenomenon - covering of the pipelines laid on the seabed or in a trench without backfilling - may take place due to the same causes. Under the effect of sand (movable) soil erosion, the pipeline may go deeper into the seabed, self-deepening will occur, and its stability in the seabed soil will improve.

For the pipeline laying on the stiff and rocky seabed soil, underwater currents may cause the lateral movement of the pipeline and excessive bending stresses.

Flow of the pipeline laid on the seabed creates depression area behind the pipeline (in the direction of the flow). Seabed soil erosion becomes more intensive in the pipeline laying area due to the differential pressure.

1.3 In the area of the seabed soil erosion below the pipeline, significant static stresses act on the pipeline due to the internal pressure, its own weight, drag force, hydrostatic pressure, and dynamic stresses due to alternating hydrodynamic forces that cause pipeline oscillations (vibration).

1.4 One of the causes of the seabed soil erosion in the pipeline laying area may be the action of the heavy water flows produced by a running vessel propeller in shallow water. The danger of such effect increases with reduction in depth under the vessel bottom and increase in vessel engine power.

1.5 A significant danger for subsea pipelines, especially in shallow water areas and in the areas with considerable fluctuations of the water level are physical damages to pipelines and their coatings by anchors, vessel keels, trawls, scrapers, ice formations and other objects.

1.6 Most dangerous for subsea pipelines in the regions, water areas of which are covered with ice during long periods of the year, are ice formations. They are characterized by large diversity, variability of properties and can exist in different forms, such as: level ice, ice with ice brash beneath, hummocks, stamukhas, icebergs. Different types of ice formations affect the pipeline structures during installation and operation in different way.

Ice formation may be subdivided in terms of fast and drifting level ice thickness into four categories, namely: light - up to 30 cm, medium — up to 100 cm, heavy — up to 200 cm and very heavy — over 200 cm. Then all prospective oil- and gas sea areas in Russia may be subdivided into five categories (refer to Table 1.6). It should be noted that ice fields of the same thickness in the seas of Russia are observed far from being everywhere.

Analysis of seasonal changes in traveltime and morphological parameters of ice cover in the water areas of oil and gas deposits in the Arctic and the Far East seas of Russia shows that there exists nothing similar in the world practice.

1.7 Special place among dynamic phenomena that take place in the sea ice cover is taken by large ice formations drift movement, which in interaction with the seabed, may result in its gouging.

Probability of seabed gouging by ice formations, possibility of occurrence of concentrated additional loads

Table 1.6

Классификация перспективных на нефтегазоносность акваторий морей России

Water area	The Caspian and the Baltic Seas, the Sea of Azov and the Black Sea basin, south-western shelf of Sakhalin Island	South-western part of the Barents Sea	South-eastern part of the Barents Sea, north-eastern shelf of Sakhalin Island	Coastal shallow water of the Kara Sea	Shelf of the Kara Sea
Sea depths, in m	30 — 200	70 — 330	15 — 100	0 — 10	50 — 150
Ice conditions	Light	Light, medium	Medium, heavy	Very heavy	Very heavy
Average ice period duration, months	0 — 2	0 — 2	3 — 9	9 — 10	9 — 10

on the subsea pipelines under the effect of stamukhas and icebergs settled on the seabed soil may have a determining influence on selection of pipeline routes, pipeline structure, burial depth into the seabed, seasonal periods for pipeline assembly, and, most importantly, on safety of construction and operation.

1.8 The phenomenon of the seabed erosion by melt water plunge pools is not ordinary process. Plunge pools are craters formed in shallow areas of the seabed. River and melt water flowing to the fast ice surface when snow is thawing penetrate through scours under the ice and flow very fast vertically down. Due to inertia forces and gravitation flows of this water are vortexed and wash out plunge pools in the seabed for several meters in depth.

Wash-out plunge pools themselves are not dangerous for the subsea pipeline but through stripping the pipeline they cause hazardous sagging of the pipeline and situate conditions for pipeline vulnerability due to hummock and stamukha backbones, and in case of open water, due to anchors and other objects.

1.9 Big areas of the Arctic seas are located under frozen soil with different geocryological conditions. In case of pipelines conveying hydrocarbons at a temperature higher than temperatures of frozen soils, the latter start to melt and settle. It can result in pipeline stripping accompanied by occurrence of additional stresses in the pipe and other associated negative phenomena.

In order to prevent the above phenomena, a feasibility study shall precede the selection of the pipeline burial depth in the frozen soil, and additional protective measures shall be taken. Application of pipes with thick insulation (up to several centimeters thick) covered with a protective metal jacket, for example, may be referred to such measures. In case of short lengths of frozen soils, a possibility of the pipeline engineering protection may be considered that provides combined laying in one trench of the main piping and a tracer line of a small diameter that has a negative temperature.

1.10 In the regions of high seismic activity the soil sliding may occur especially in the inclined layers forming seabed deformation. Tsunami may also lead to a great seabed erosion and increase of the hydrostatic pressure on the pipeline. That is why it is necessary to perform analysis of geological structure of the foundation soil and geodynamic risks to select the pipeline route.

2 PROTECTION OF SUBSEA PIPELINES AGAINST HYDRODYNAMIC AND MECHANICAL EFFECTS

2.1 General

2.1.1 In order to protect the subsea pipelines against damages and to ensure fail-safe operation, use may be made of various methods, most of which shall be developed at the pre-conceptual and conceptual design stages. Referred to such methods may be: redundancy, restrictions on the minimum permissible distance between the parallel pipelines, laying in a trench with subsequent backfilling, seabed reinforcement in shallow waters, inshore and coast revetment in the transition section of the pipeline exposed to the greatest wave effects.

2.2 Redundancy

2.2.1 In order to assure reliability of the pipeline system the redundancy of the subsea pipeline by installation the booster pipeline parallel to the main pipeline may be allowed. The expediency of redundancy shall be supported by technical and economic feasibility study.

2.3 Distance between the parallel pipelines

2.3.1 The correct selection of a distance between the pipelines laid in parallel provides to a considerable extent safety of the subsea pipeline operation and uninterrupted transfer of transported media. The distance between the parallel pipelines shall be determined based on the conditions, under which an accident or catastrophe of one pipeline does not cause failure of the nearest parallel pipeline.

2.3.2 In general case, the distance between the parallel subsea pipelines shall be specified based on geological and hydrological conditions, methods of digging underwater trenches, if any, convenience of laying pipelines therein, safety of the pipeline in case of an accident. In all cases, the minimum distance between the parallel subsea pipelines shall be:

for gas pipelines buried in the seabed:

30 m — at diameters to 1000 mm inclusive;

50 m — at diameters over 1000 mm;

for gas pipelines laid on the seabed:

100 m — at all diameters.

For oil- and oil product pipelines these distances may be the same as for gas pipelines; they may be reduced subject to adequate substantiation and agreement by the Register.

2.4 Pipeline burying in a trench with subsequent backfilling

2.4.1 An efficient protection measure of the subsea pipeline against a destructive effect of waves, currents, storms, ice formations, physical damages by anchors, trawls, scrapers, etc. is burying of the pipeline in a trench with subsequent backfilling. This is a labor-consuming and expensive arrangement that requires performance of big volume of underwater earthwork.

2.4.2 A necessity of the pipeline burying and burial depth are dictated by hydrogeological conditions of the region, probability of the pipeline damage under external and internal effects, economic considerations.

In shallow water, especially where a probability of ice formation occurrence exists, pipeline burying is mandatory. Pipelines may be laid without burying and backfilling only at large depths, however, burying is also required in the coastal areas. Depths from 25 to 30 m and over may be considered to be fairly safe. Smaller depths are subject to special consideration. Most reliable will be a decision that is based on the most thorough investigation of the pipeline routing area for each particular case.

2.4.3 Burying of pipelines in the seabed shall be normally done by laying them in preliminarily dug or washed-out trenches. Rocky soils excavation using both crushing equipment or explosive methods may be allowed and such technology shall be approved by the technical supervisory bodies. The designed trench profile is normally assumed to be a trapezium. The requirements for trench construction and selection of main geometrical parameters (slope grade, trench width, distance between the pipe side and a communication cable, etc.), with regard to a free passage for a diver for the pipeline inspection after laying of the pipeline in the trench, seabed sediments, pipeline diameters and burial depth, shall be specified in the technical design.

2.4.4 In certain circumstances, pipelines may be buried after laying them on the seabed with the aid of pipe burying vessels or other special mechanisms. Pipe burying vessels shall be used where pipeline can be preliminarily laid following the natural contour of the seabed with acceptable bending radii and where there are no underwater rocks.

2.4.5 In case of ice cover in shallow water, a trench may be dug by a mechanism operating through openings in the ice.

2.4.6 The increase of the trench depth requires a substantial increase of power inputs. Therefore deep trenches shall be dug using several passages. Digging of more narrow trenches with strengthening of their walls by temporary baffles to prevent their fall may be an alternative.

2.4.7 Pipelines laid in trenches are backfilled with a soil to the design reference marks selected so as to protect the pipeline against the physical damages. Having been laid in the trench and tested before backfilling, the pipeline shall be examined by a diver.

The following shall be determined in the course of the diver's examination:

local soil erosion, pipeline sagging and displacements in relation to the design route, deviation from the design reference marks;

damages to external corrosion-protection coatings;

breaks in solid weight coatings and correct arrangement of weights on the pipeline.

The defective places found are marked with buoys, and measures are taken to eliminate the defects.

2.4.8 Upon laying, subsea pipelines are backfilled to the design reference marks indicated in the design specification. The thickness of the seabed soil layer above the pipeline shall be not less than the design value or shall exceed it by not more than 20 cm.

The method of trench backfilling shall be selected depending on the season of the year (whether it is winter or summer), trench depth, water depth, current velocity and earthwork to be done.

Where the local seabed soil in terms of its mechanical-and-physical properties is not suitable for backfilling, it shall be substituted by a specially brought soil. Sometimes, under special conditions where drifting sand currents occur, a sanding-up phenomenon can be used for trench backfilling (refer to 1.1), as well as for plunge pool self-filling (refer to 1.8), which allows considerable decreasing of the earthwork cost.

2.4.9 In exceptional cases, where the subsea pipeline burying is not economically feasible, and the length of the subsea pipeline is relatively small, bags filled with sand or stones, or mattresses of various types may be put above the pipeline or it is covered with polymer boards, reinforced concrete slabs, or combinations of the above methods are used.

2.4.10 For safety reasons the pipeline route is sometimes transferred to the area with more favorable conditions for pipeline construction and operation although it may result in increase of the pipeline length and cost.

2.4.11 In any case, to determine the subsea pipeline routing and the required burial depth, comprehensive investigation of the suggested area for the pipeline installation shall be conducted. Such investigation shall include thorough studies of the seabed relief, depths, composition of the seabed soil, statistical data on winds, waves, currents, local changes in seabed shape, duration of ice coverage period, ice cover dynamics, especially of

large ice formation. It is also necessary to know local specifics, such as presence of frozen soils under the seabed, probability of a thermal action of the product conveyed through the pipeline on the frozen soils, formation of plunge pools in the seabed soil, etc.

2.4.12 There does not exist a strict regulation of the pipeline burial depth, and it cannot basically exist. An issue of each pipeline protection and its safe operation shall be decided in each particular case individually based on investigation of the situation in the area of the pipeline route. The more thorough investigation is conducted, the more exactly the burial depth of the pipeline will be determined and the safer its operation will be.

Some generalized recommendations on burial depths of subsea pipelines in the sea bed soil are specified in Table **2.4.12** below. Where no more reliable data are available, these recommendations may be used at earlier stages of the subsea pipeline design (refer to 8.3, Part I "Subsea Pipelines").

Table 2.4.12

Recommendations on selection of pipeline burial depth

Prevailing external factor	Burial depth	Note
Large ice formations	The burial depth shall be determined by the maximum depth of gouging furrow plus 1,0 m	Recommendation does not allow for extreme cases
Seabed plunge pools	The burial depth shall be equal to the depth of plunge pool plus 1,0 m	
Frozen soils	Where pipelines for conveying hydrocarbons at a temperature higher than the surrounding frozen soils are laid, their burial depth shall be selected based on the calculation made using numerical methods that would allow to exclude melting and settling process capable to result in pipeline stripping	
Seabed soil erosion by currents, waves, flows from operating vessel's propellers	The burial depth shall be determined by the maximum possible height of the washed-out soils plus 1,0 m	
Currents and waves	Where rocks penetrate the seabed, the burial depth shall be the sum equal to the pipeline diameter plus 0,5 m	
Horizontal displacements	Where currents and waves shall be taken into account, the burial depth shall be selected so as to exclude the dangerous horizontal displacements	
Anchoring of marine engi neering facilities	The burial depth in the area of possible anchoring of vessels or other engineering facilities shall be assumed equal to 2,5 m	Use of trawls, scrapers and other objects towed along the seabed shall be taken into consideration separately
Ecological water purity	Where pipelines are laid below the seabed of fresh water lakes and basins, their burying depth shall be based on the conditions that totally exclude loss of the water purity in the lakes and basins	
Problems with burying	Where it is impossible to provide the required burial depth, the pipeline route shall be transferred to the area with more favorable conditions for the pipeline construction and operation	
Large ice formations	In the areas with large ice formations, the burial depth may be assumed equal to zero (laying on the seabed) at possitive results of morthometric anylisis of ice formations that ptove the absence of gouging with specified probality. Generally this condition may be met at depths from 25 m till 30 m and over	Recommendation does not allow for extreme cases

APPENDIX 2

INDICES OF RISK ANALYSIS

1 GENERAL PROVISIONS AND CHARACTERISTICS

1.1 The risk concept is used for measurement of hazards that objectively associated with industrial activities and leading to accidents resulted in a loss of health and fatalities, harmful effects on the environment, destructions of material objects and losses of property and benefits.

1.2 The risk is measured by evaluation of the degree of risk as a set of risk indices and their values. The degree is determined based on the results of the risk analysis which is a means to identify existing and potential hazards, to determine undesirable events with assessment of possible frequency and consequences of their occurrence, and to develop recommendations on reduction of degree of risk in case of acceptable level of risk is exceeded.

1.3 Depending on the purpose of risk analysis and available information the quantitative or qualitative indicators and methods of risk analysis are used.

In case of quantitative analysis, the results are obtained by calculation of numerical indicators of the degree of risk.

In case of qualitative analysis its results are presented by ranking and/or classification of accident frequency and consequences of accidents using the predetermined appraisals and/or opinions of qualified experts.

Results of risk analysis are presented in the form of the text analysis, quantitative indicators, tables, diagrams, charts and other means.

1.4 The degree of risk of accidents with an engineering system is determined based on the analysis of all indices of risk found in analysis of undesirable events capable cause accidents under certain circumstances (e.g., leakage of pipeline and equipment, failure of warning, alarm and monitoring systems, errors of attending personnel, unfavorable weather conditions, external mechanical impacts, etc.).

Based on the principal cause of risk occurrence, risks are subdivided as follows:

natural risks mean risks associated with the natural disaster, such as earthquakes, floodings, storms, tornados, etc.;

engineering risks mean risks associated with the hazards caused by technical objects;

Based on the objects exposed to danger, risks are subdivided as follows:

humanitarian (social) risks mean risks associated with danger to life, health or living environment;

property (financial) risks mean risks associated with the hazard of inventory loss, malfunction of the subsea pipeline, reduction of results of financial and economic activities;

environmental risks mean risks associated with the adverse environmental impact.

2 POTENTIAL TERRITORIAL RISK

2.1 Potential territorial risk means a spatial distribution of frequency of consequences of a certain level or hazardous effects of a certain type leading to these consequences over a certain period of time. For example, the potential risk of fatality on a certain territory is determined by the frequency of at least one lethal of an accident on the considered area (shock wave, thermal effect of fire, chemical contamination, etc.).

Potential risk characterizes the hazardous object and territory regardless of presence of people in the area of hazardous exposures.

2.2 In practice the distribution of potential risk is defined as a set of frequency values of a certain level hazard occurrence on the territories for all or single sources (objects and accidents on them) and all or some damage effects of accidents.

2.3 Potential risk is an intermediate measure of a hazard used for assessment of individual and societal risks.

Individual risk is calculated by a given territorial risk using distribution of frequency of presence of an individual in the particular areas of the territory.

Societal risk is defined by a given territorial risk using distribution of number, places and time of staying of people in the area under consideration.

3 INDIVIDUAL RISK

3.1 Individual risk means a probability (frequency) of individual injury P of a certain degree caused by action of type A hazard factors over a certain period of time.

In case of technical hazards, individual risk is basically determined by a potential risk and probability of presence of an individual in the area of possible action of accident hazardous factors during the time sufficient for lethal effect.

Individual risk is determined in many respects by the taken safety measures (e.g., timely public alert, application of protection means, evacuation etc.), skills of people to act in hazardous situations and their protectability.

3.2 Individual risk is measured by a probability of a certain degree of consequences (fatality, injuries, disability) over a certain period of time (usually over a year).

3.3 At various effects (e.g., blast injury, thermal effect of fire, chemical poisoning with harmful substances or combustion products, etc.), the total individual risk may be determined as a sum of risks for separate effects provided their independence.

3.4 In practice, the individual risk analysis is made for groups of people characterized by approximately the same time of staying in different hazardous zones and use similar protection means rather than for an individual. Individual risk of attending personnel, personnel of an object in general and population of surrounding areas is normally considered.

4 SOCIETAL RISK

4.1 Societal risk characterizes the scale of possible accidents and catastrophes and is determined as a function called *FN*-curve. Depending on the purpose of the analysis, *N* may mean either the total number of people affected or the number of fatalities or another indicator of severity of consequences. *F* means the frequency of events with a severity of consequences exceeding the given value *N*. The example of plotting *FN*-curves is given in the Rules for the Classification and Equipment of MODU/FOP.

4.2 The criterion of the acceptable degree of risk is determined in such case not by damage from a single event but a curve plotted for all possible scenarios and consequences of accidents.

A general approach for the analysis is use of two curves — for the calculated societal risk and acceptable societal risk. Where the curve of calculated risk is above the curve of the acceptable risk at least on one line portion (the greater number of injured at the same frequency or higher frequency for the same consequences) then the relevant design decision and/or taken safety measures shall be considered unacceptable and they shall be subject to review. The area between these curves defines the intermediate degree of risk and the issue regarding how to reduce it shall be decided based on the feasibility study and on agreement upon with the Register.

4.3 Assumed as variable *N* may be proprietary or environmental damage, then, corresponding to these values *FN*-curves that will serve as a measure of insurance or environmental damage can be plotted.

5 POTENTIAL LOSS OF LIFE (PLL)

5.1 Potential loss of life (PLL) is an integral measure of a hazard and determines the expected number of injured resulted from an accident on the territory of an object over a certain period of time (e.g., over a year or over the whole period of object operation).

5.2 The individual and potential loss of life may be transferred into economic and financial categories. For this purpose, various approaches to define "the cost of life" are used in practice:

to develop safety measures — as a value of extra costs for object construction and operation necessary to reduce potential loss of life per unit;

to evaluate damage — as a value of costs and compensations in case of fatality.

The concept content definition and relevant values shall be defined to establish acceptable risks criteria.

6 ENVIRONMENTAL RISK

6.1 Environmental risk means damage to the environment after the accidents on hazardous objects.

6.2 The following indicators may be used to assess environmental safety:

the value of the maximum calculated volumes, intensity and duration of emissions of transported harmful substances into the environment at accidents on pipeline sections;

annual exceedance frequencies of the specified leakages (*FN* curves);

annual average frequency of leakages and emissions at pipeline leakage by any reason;

average volume and average total volume of leakages.

6.3 The following indicators may be used to determine environmental risk in value terms (e.g., for insurance purposes):

statistically expected compulsory payments and obligatory indemnifications for harmful substances emission into the environment;

statistically expected costs for remedial action.

The above indicators shall be calculated in direct value terms and as a risk of damage (the value determined by the product of the accident frequency by a damage).

APPENDIX 3

METHODS OF RISK ANALYSIS

The principal methods recommended for application in risk analysis are given in this Appendix. The representative scenarios of potential accidents at subsea pipelines are also provided as failure trees and a tree of events, which may develop after the occurence of an emergency event. For reference, the information on the accident rate of subsea pipelines is added.

1 Checklist and "What-if" methods or their combination refer to a group of qualitative hazard assessment procedures based on studying compliance of the operating conditions of the object (the subsea pipeline) with the safety requirements in force.

1.1 The checklist is a method for identification of compliance of a designed or operated object with the existing standards. This method is used at any stage of the object's life cycle and allows identification of the existing hazards.

1.2 The checklist method is drawn up, where necessary, for specific situations and is used, for example, for assessment of correctness of marine operations, solution of the problems that require careful attention.

1.3 The result of the checklist method is a list of questions and answers regarding compliance of the subsea pipeline with safety requirements. An example of drawing up of the checklist for the analysis of accident situation is given in the Rules for the Classification and Equipment of MODU/FOP.

1.4 The checklist method differs from the "What-if" method in more complete presentation of the initial data and results of safety violation consequences.

1.5 The "What-if" method uses the questions beginning with "What-if" and considers the development of a situation after these words. The compilers of an analysis shall be very cautious and adequately realistic in order to avoid improbable scenarios of the event development in emergency situations.

1.6 The "What-if" method may be used during design, modernization or operation of the subsea pipeline. It results in a list of hazard zones that are potential for accidents and the methods supposed for accident avoidance and prevention.

1.7 The above methods are fairly simple if preliminary provided with auxiliary forms, unified forms for analysis and presentation of the results, relatively inexpensive and most effective in studying well-known objects with a minor risk of major accidents.

2. Failure Mode and Effect Analysis (FMEA) is used for qualitative safety assessment of engineering systems and is applied for determination of failures causing or contributing to occurrence of accidents. The specific feature of this method is consideration of possible failures of each engineering system part (the pipeline component) or an individual component (type and cause of failure) and failure effects during the subsea pipeline operation.

2.1 At the design stage of the subsea pipeline FMEA may be used to determine the necessity of additional safety measures or their reduction. In modernization of the subsea pipeline, FMEA permits to determine their influence on the existing structures and equipment. The method may be applied during operation of the pipeline for identification of single failures likely to result in severe consequences.

2.2 Subjectivity of FMEA method requires involvement of several experts in its application, competent in issues of the pipeline transport processes and the equipment used. The method of analysis of failure types and consequences may be used together with other methods of hazard identification, e.g., HAZOP.

2.3 Failure Mode, Effects and Critical Analysis (FMECA) is similar to FMEA but, different from that method, it allows to add results of analysis due to the fact that each type of failure is ranked with regard to two criticality components - combinations of probability (or frequency) and severity of failure consequences. Record of criticality parameters allows to substantiate the priority of safety measures. The concept of criticality is close to the risk concept and therefore may be used in quantitative analysis of accident risk.

2.4 FMECA results are presented in the form of standardized tables with a full list of equipment and components, types and causes of possible failures, frequency, consequences, criticality, failure detection means (alarms, monitoring devices, etc.) and recommendations on hazard mitigation.

2.5 The following criteria may be considered in terms of severity of consequences:

catastrophic - results in fatalities, causes long-lasting and large-scale damage to the environment, significant damage to material objects;

critical (non-critical) failure — threatens (does not threaten) human life, environment, material objects;

failure with negligible consequences — a failure which refers, in terms of its consequences, to none of the above three categories.

2.6 Recommended indicators (indices) of the level and criticality criteria in terms of probability and severity of consequences of failure (event) are shown below in the "Probability — severity of consequences" matrix (refer to Table **2.6**).

Table 2.6

Expected frequency of occurrence (1/year)		Severity of consequences			Failure with negligible consequences
		Catastrophic failure	Critical failure	Non-critical failure	
Frequent failure	> 1	A	A	A	C
Probable failure	$1-10^{-2}$	A	A	B	C
Possible failure	$10^{-2} - 10^{-4}$	A	B	B	C
Infrequent failure	$10^{-4} - 10^{-6}$	A	B	C	D
Practically unlikely failure	$< 10^{-6}$	B	C	C	D

In practice, four groups of affected objects to which damage may be caused by an accident, may be selected for the analysis, namely: attending personnel, population, environment, material objects. In the case, under consideration, rank A corresponds to the highest (unacceptable) risk degree that requires immediate safety measures to be taken. Ranks B and C correspond to the intermediate risk degrees, and rank D to the safest conditions.

Depending on the hazard rank:

A — thorough detailed risk analysis is mandatory, special safety measures are required for reduction of risk;

B — detailed risk analysis is desirable, safety measures are required;

C — risk analysis and safety measures are recommended;

D — no risk analysis and safety measures are required.

In risk analysis, contributions of risks of the subsea pipeline component failures to the joint risk of an accident shall be assessed and these data shall be used for the development of recommendations.

2.7 FMEA and FMECA methods may be used for analyzing designs or during modernization of the subsea pipelines. The analysis with application of such methods is normally made by a team of **3** to **7** people with mandatory involvement of the independent experts.

3 Hazard and Operability Study (HAZOP) investigates the effect of deviations of technical parameters (pressure, temperature, etc.) from normal operating conditions from the viewpoint of hazard occurrence. HAZOP method may be used in design, modernization and operation of the subsea pipelines. In terms of complexity and detailedness of the results, the HAZOP method is consistent with the FMEA and FMECA methods.

3.1 In the course of analysis possible deviations in operation and their causes are identified, and a list of measures and recommended alterations, proposals or actions to improve safety and/or operability aimed to detect and prevent the deviations is compiled for each subsea pipeline and its equipment.

3.2 A standard set of key words that helps to reveal systematically all possible deviations (such as "no", "more", "less", "as well as", "another", "other than", "opposite to", etc.) are used to characterize the deviations. The concrete combinations of the words with technical parameters are determined by specifics of the media transported through the pipelines and appropriate conditions. The approximate combinations of key words are as follows:

NO — no direct supply of the transported medium when it shall take place according to the process;

MORE (LESS) — increase (reduction) in values of operational variables in comparison with the specified values (pressure, throughput, temperature, etc.);

AS WELL AS — new components included (air, water, impurities);

ANOTHER — condition different from normal operation (start-up, stop, etc.);

OTHER THAN — total change of the process, contingency, destruction, de-pressurization, etc.;

OPPOSITE TO — logic opposition to intention, backflow of the transported medium.

3.3 The HAZOP method results are presented on special flow sheets (tables). The degree of hazard may be determined quantitatively by assessment of probability and severity of consequences of the accident under consideration, using criticality criteria similar to FMECA method.

In addition to identification of hazards and their ranking, the HAZOP method similar to FMECA permits to clear up uncertainties and inaccuracies in safety instructions and to improve them. Efficiency and effectiveness of this method depend to a considerable extent on qualification of experts. The disadvantages of HAZOP and FMECA methods can be explained by the absence of possibility to analyze combinations and cause-effect relations of events causing an accident.

4 Logic and graphic methods of "failure and event trees" analysis

4.1 "Failure and event trees" analysis methods are logic and graphic methods used to reveal cause-effect relations between the events.

4.2 Fault tree analysis (FTA) permits to detect combinations and sequence of equipment and component failures, personnel errors and external (technogenic, natural) effects causing the main event, i.e. an accident.

The FTA method is used for analysis of likely causes of accident occurrence and calculation of frequency based on the knowledge of initial event frequencies. Examples of construction and application of the fault tree for analysis of accidents is given in the Rules for the Classification and Equipment of MODU/FOP.

4.3 The Event Tree Analysis (ETA) is an algorithm of plotting sequence of events resulted from some main event (accident), which under certain conditions (occurrence or absence of other events, actions and/or circumstances) may lead to an accident situation.

For analysis of accident development, the event tree is materialized in the form of risk distribution diagram. The plotting of the event tree branches starts from events suggested by information on accidents in the past, as well as compiling a priority list of hazards detected by qualitative methods of analysis.

The frequency of each stage of development of an accident is found by multiplying the previous stage by probability of occurrence or absence of the event or condition expected at this stage. For instance, accidents with leakage of subsea oil or gas pipeline (occurence of ignition source) can develop with and without ignition depending on the particular conditions. In turn, the ignition under certain circumstances (drop of pressure in an accident section) can develop following the jet fire or focal fire scenario (flood fire).

The tree is constructed until the occurence of events being subject of risk analysis (injury of people, emission of harmful substances into the environment, etc.). Particular probabilities of these events occurred during materialization of various scenarios are integrated to get consolidated risk indicators for the main analyzed event.

4.4 Fault and event tree techniques allow to review the events and conditions of various nature in combination — initial failures of processing and monitoring equipment, operation of safety systems, actions of operators, external effects, etc.

4.5 Fault and event tree techniques are labor consuming and shall be used for analysis of designs or revamping of sophisticated engineering systems. Specific objects subject to the quantitative risk analysis (the pipeline system in general, its part or production assembly, certain types and scenarios of accidents, etc.) shall be determined at previous stages of risk analysis.

5 Quantitative methods of risk analysis are characterized by calculation of risk indices specified in Appendix 2 and can include one or several of the above methods or use their results.

5.1 The efficiency of the quantitative risk analysis becomes mainly apparent:

at object design stage;

in safety assessment of the objects which have equipment of the same type;

where complex evaluation of accident impact on people, environment and material objects is necessary;

in development of a list of priority measures on protection of the hazardous object.

5.2 Performance of the quantitative analysis requires high qualification of personnel, big volume of information on failure rate of equipment, consideration of specific features of the locality, weather conditions, time of staying people in the risk area of the hazardous object territory, the conditions of population staying in the neighbouring regions and other factors.

Mathematical models and calculation procedures for the assessment of physical-chemical and other events accompanying the accident shall be used at intermediate stages of the analysis.

5.3 Limitations of the quantitative risk analysis methods include: high labour intensity, cost and duration of preparation and analytical works, as well as possibility of obtaining results characterizing significant statistical uncertainty, which doesn't allow to justify practical safety measures.

6 Representative scenarios of potential accidents at subsea pipelines

The example of the representative failure tree for the subsea pipeline is shown in Fig. 6-1.

The representative scenarios of potential accidents at subsea pipelines as the trees of failures resulting in breaking the pipeline integrity at external and internal corrosive wear are shown in Figs. 6-2 and 6-3.

The example of the tree of events, which may develop after the occurence of an emergency event (breaking the pipeline integrity due to corrosive wear) is shown in Fig. 6-4.

7 Information on the accident rate of the subsea pipelines on the basis of foreign experience of subsea pipelines operation

At present the systems of subsea pipelines in terms of their number, length and operational experience have been established in the North Sea and the Gulf of Mexico. The data on the accident rate of subsea pipelines for those systems are available in the following sources:

data of the Health and Safety Executive (UK) — on the North Sea pipelines;

data of the Office of Pipeline Safety of the USA Department of Transpotation (USA) — on the Gulf of Mexico pipelines.

The characteristics below feature the accident rate of subsea pipelines.

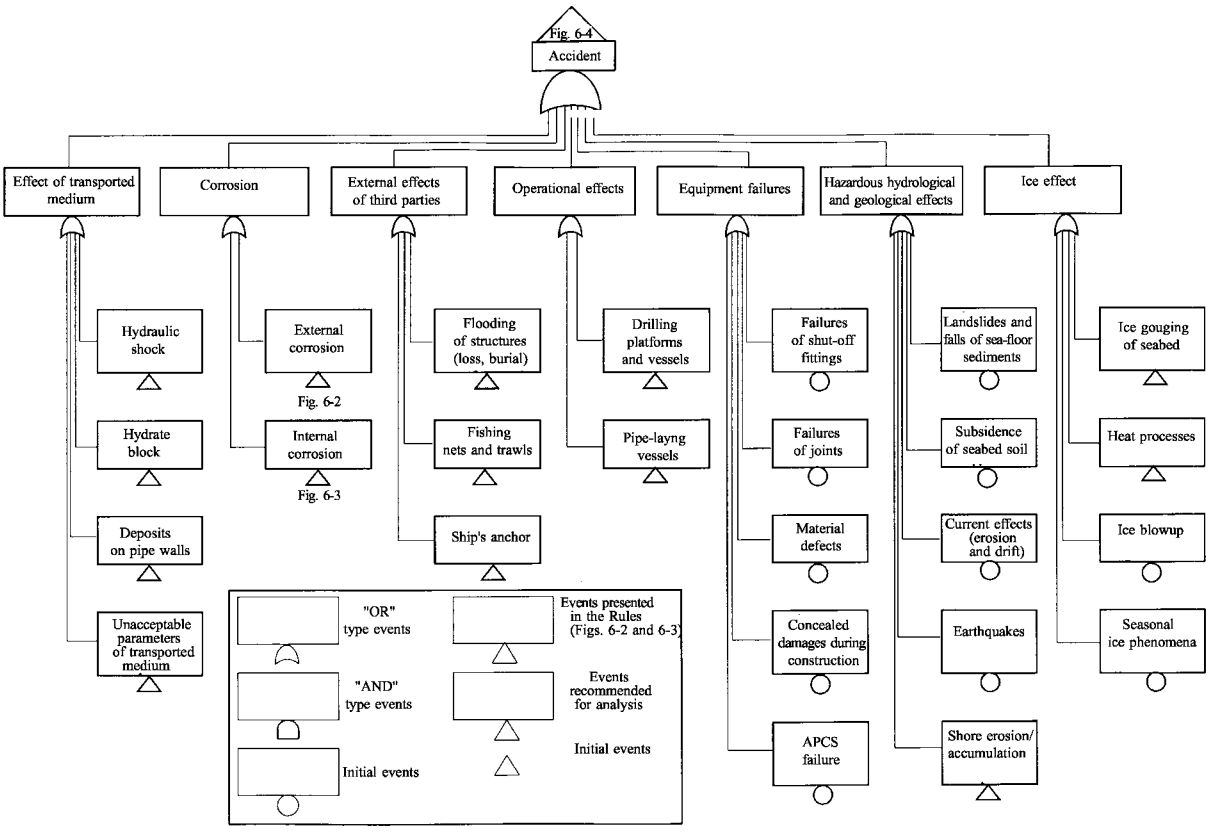

Fig.6-1
Failure tree for subsea pipeline accidents (break of pipe integrity)

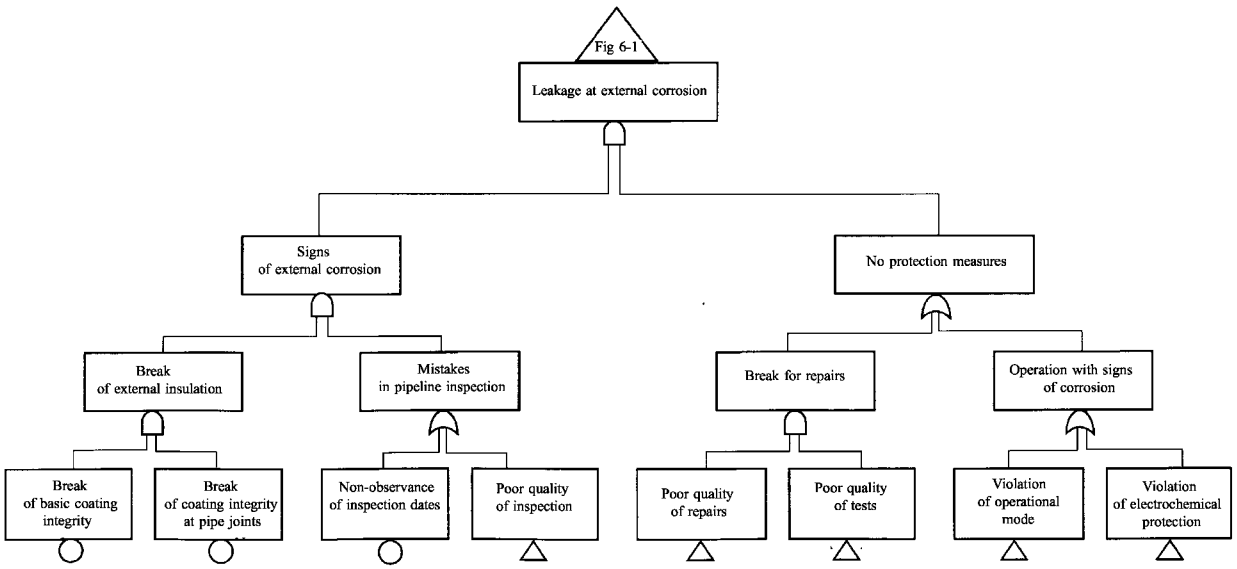

Fig. 6-2
Failure tree for an accident associated with external corrosion of a subsea pipeline

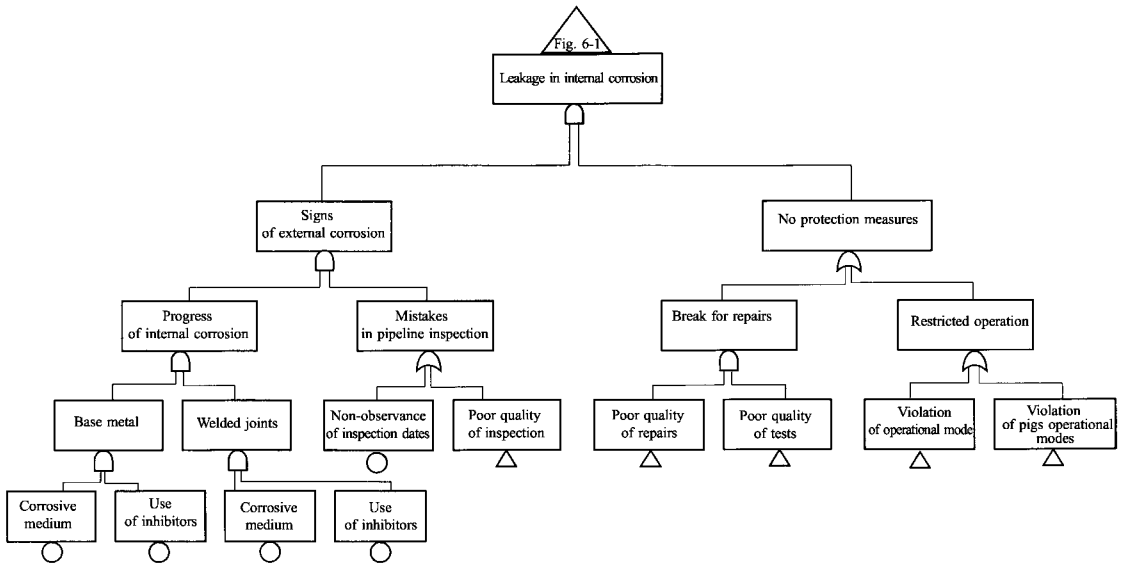

Fig. 6-3
Failure tree for accident associated with internal corrosion of a subsea pipeline

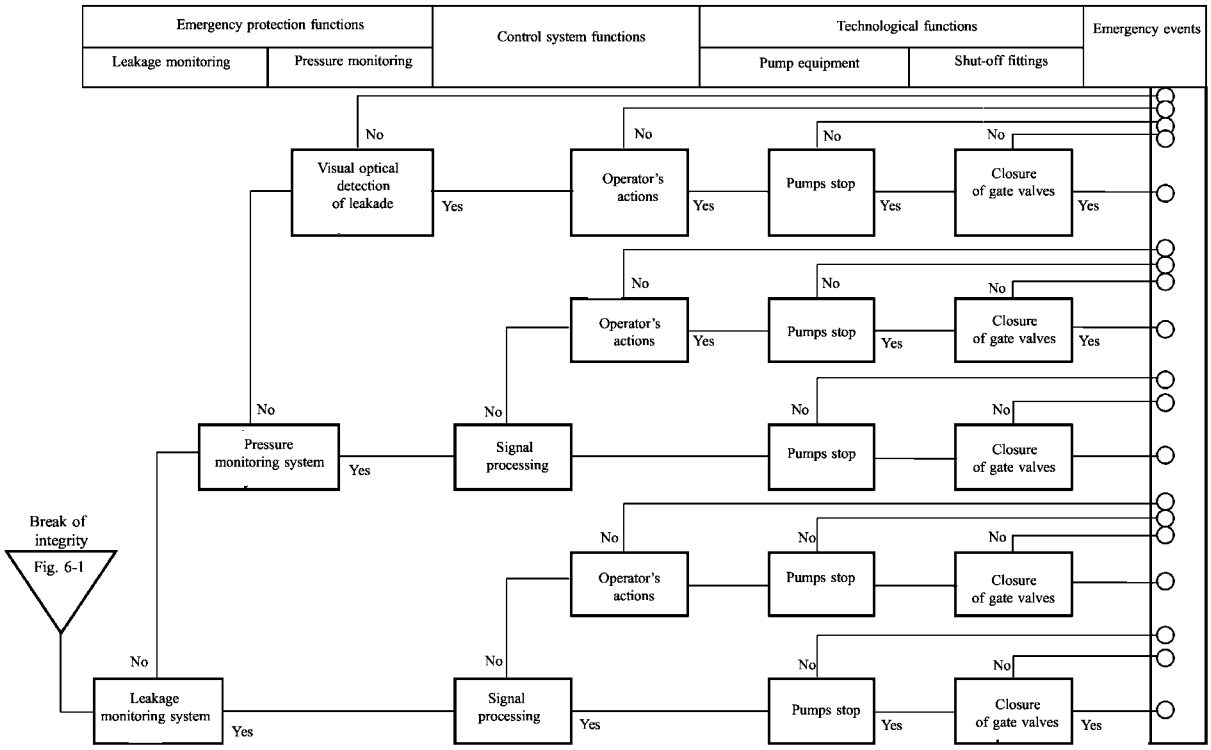

Fig.4
Event tree for subsea pipeline accidents (break of pipe integrity)

7.1 The North Sea pipelines

1069 steel subsea pipelines of 40 inches in diameter with the total operational experience over 300000 km × year have been in operation in the North Sea by the end of 2000 (refer to Table 7.1-1):

Table 7.1-1

Pipeline diameter, inches		Number of pipelines by the end of 2000	Total length of pipelines by the end of 2000	Lifelength for 1971 to 2000, km × year
All steel pipelines		1069	22848,0	307246,0
By diameter, inches	up to 9	552	5034,0	52973,0
	10 to 16	266	3889,0	47536,0
	18 to 24	126	4352,0	58843,0
	26 to 40	84	8441,0	147571,0
	no data	41	1131,0	322

The accident rate of the given system of subsea pipelines during the entire period of its operation is characterized by the indices specified in 7.1-2:

Table 7.1-2

Pipeline diameter, inches	Lifelength, km × year	Number of accidents		Design frequency, 10^{-4} (km × year)$^{-1}$	
		accidents followed by repairs	accidents with leakages	accidents followed by repairs	accidents with leakages
Up to 9	45679,0	11	7	2,41	1,53
⩾10	243843,0	15	4	0,62	0,16
Of them:					
10 to 16	44286,0	11	1	2,48	0,23
18 to 24	56728,0	1	1	0,18	0,18
25 to 40	146052,0	4	2	0,27	0,27

7.2 The Gulf of Mexico pipelines

The following accident rate on the accidents resulting in leakages into the environment was the case in the Gulf of Mexico during a period of 1985 to 1999 with the operational experience of 184000 km × year (refer to Table 7.2):

Table 7.2

Pipeline diameters and leakage volumes	Lifelength, km × year	Number of leakages for period	Design frequency, 10^{-4} (km × year)$^{-1}$
< 10 inches in diameter		7	0,66
by leakage volumes (barrels)			
50 to 100	105390	2	0,19
100 to 1000		2	0,19
1000 to 10000		2	0,19
> 10000		1	0,09
> 10 inches		8	1,01
by leakage volumes (barrels)			
50 to 100	78879	1	0,13
100 to 1000		2	0,25
1000 to 10000		4	0,51
> 10000		1	0,13

7.3 Based on the specified data, the following levels of risk management according to the ALARP principle may be recommended in specifying the risk criteria of leakage occurrence (environmental risk) for the subsea pipelines being designed:

inadmissible risk level — $1{,}0 \times 10^{-4}$ (km × year)$^{-1}$;

negligible risk level — $0{,}5 \times 10^{-5}$ (km × year)$^{-1}$;

risk level to be analysed — from $0{,}5 \times 10^{-5}$ to $1{,}0 \times 10^{-4}$ (km × year)$^{-1}$.

The establisment and observance of such levels of risk management shall allow ensuring the safety of the new subsea pipelines being constructed at the level superior to that in world practice.

While establishing the criteria and during the risk analysis it is necessary to consider the details of subsea pipeline route sections which affect the degree of a hazard of accident occurrence:

sections within the safety zones of offshore gas and oil producing facilities and wells with underwater wellhead;

sections in areas with shipping, fishing and other activities in the water area;

sections in areas with hazardous geological phenomena;

sections in areas with deformation of the seabed and coastlines;

sections in areas with hazardous ice and cryopedological effects;

sections, which threaten with pollution of specially guarded and sensitive territories in case of leakages.

APPENDIX 4

SPECIAL TEST PROCEDURES FOR STEEL PIPES AND ROLLED PRODUCTS

1 DETERMINATION OF CRITICAL BRITTLENESS TEMPERATURE USING DWTT PROCEDURE

1.1 The procedure is applicable to the test specimens cut out from the base metal of steel pipes with a diameter equal to and exceeding 500 mm, wall thickness exceeding 7,5 mm and from rolled sheets, skelps (hereinafter referred to as "plate") of the same thickness as for their manufacture. The test consists of impact bend loading of a specimen with the stress concentrator provided by a free falling weight or impact-testing machine pendulum till fracture. A series of 10 specimens is usually tested at room and low temperatures (two specimens per the temperature) to determine the percentage of ductile component in fractures and drawing up the fiber percentage to temperature ratio. As a result, the following shall be determined:

the temperature, at which the specimens meet the criterion to the specified content of fiber component in the fracture;

average and minimum content of fiber component in the fracture at the operation temperature for the steel grade to be tested.

The pipe sample (billet) shall be cut out transverse to the pipe longitudinal axis in compliance with Fig. 1.1. The plate sample (billet) shall be cut out transverse to the rolled product axis from the first quarter of the plate width.

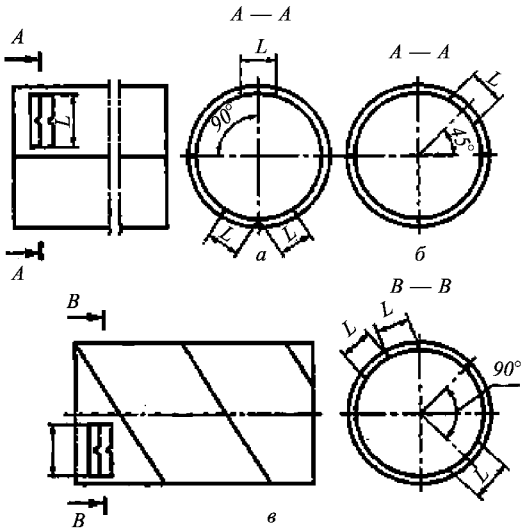

Fig. 1.1 Specimen cut out:
a — longitudinal welded pipe with one longitudinal seam;
b — longitudinal welded pipe with two longitudinal seams;
c — spiral welded pipe; *L* specimen length

The quantity of pipes or plates to be tested is specified in Table 4.2.3.5.1.1, Part I "Subsea Pipelines", unless otherwise stated. When a sample (billet) is cut out using flame cutting the machining allowance shall be at least 15 mm from the cut line to the specimen edge.

The pipe sample straightening shall be carried out using static loading. After completion of straightening the bend deflection shall prevent the specimen from rotation in the plane of load application during the test. It is permitted to use specimens with their midsection has not been straightened at the length equal to two thicknesses; in this case, simultaneous straightening of both sample ends is recommended.

General requirements for specimen straightening are similar to those specified in Section 2 of this Appendix for CTOD-tested specimens.

Where there is a difference in test results obtained on straightened and non-straightened specimens, the preference shall be given to non-straightened specimens at arbitration tests.

1.2 The tests shall be conducted on prism specimens with a notch on a surface in tension, from which crack propagation under impact loads may take place (Fig. 1.2-1). Milled notch is not permitted. Pressed notch (refer to Fig. 1.2-1, A) and chevron notch (refer to Fig. 1.2-1, B) are permitted.

In addition to percentage of fiber component it is reasonable to register the energy consumed for the specimen destruction.

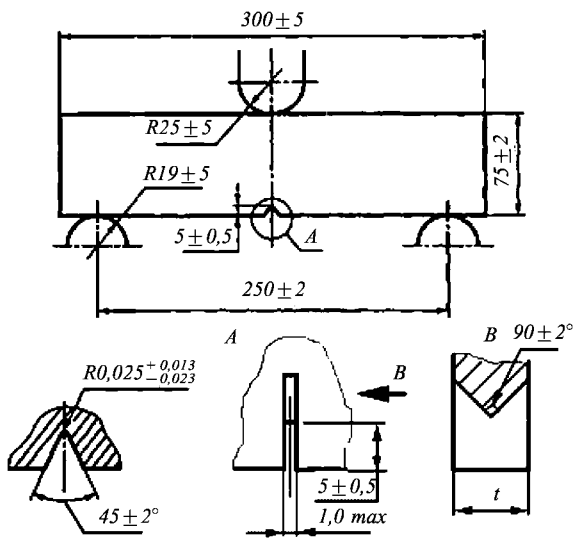

Fig. 1.2-1
Specimen and testing equipment (*t* — thickness)

Basic diagram of appliers recommended for pressing-in the concentrators and dimensions of the hob working section are shown in Fig. 1.2-2. The chevron notch is made using the disk cutter or metal slitting saw, radius at its top is not specified.

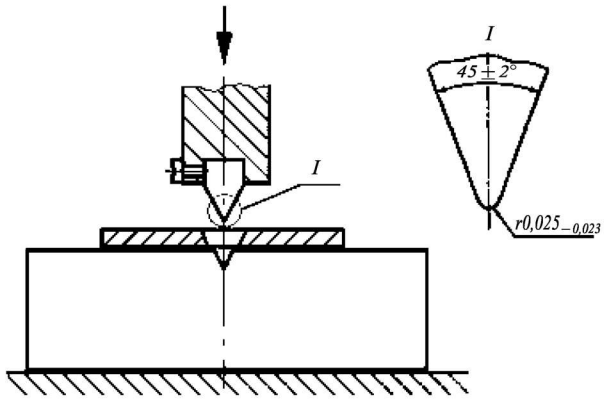

Fig. 1.2-2
Notch pressing-in device

The required capacity of an impact-testing machine may be evaluated by the formulae:

$$KDWTT_p = 5{,}93t^{1,5}KV^{0,544}; \quad (1.2\text{-}1)$$

$$KDWTT_{ch} = 3{,}95t^{1,5}KV^{0,544} \quad (1.2\text{-}2)$$

where $KDWTT$ = $DWTT$ impact energy with a chevron (ch) and pressed notch (p);
t = specimen thickness, in mm;
KV = impact energy, in J.

The specimen is mounted on supports in such a way that the impact of striker shall break the test specimen from the side opposite to the concentrator. The specimen shall be placed in such a way as to provide the concentrator symmetrical location to supports and its axis shall be aligned with the striker center line within ±2 mm. The specimen shall be mounted on supports of the impact-testing machine and be supported by special thrusts in such a way as to prevent its axial rotation under impact when tested. The impact velocity shall be not less than 5 m/s and, preferably, not more than 6 m/s.

The specimens are cooled in liquid (alcohol) at the temperature equal to the test temperature with an accuracy of ±2 °C. The specimens with thickness equal to 19 mm or less shall be soaked for at least 15 min in a cooling bath after reaching the specified temperature. The specimens with thickness exceeding 19 mm shall be soaked on the basis of 1 min per 1 mm of thickness. Pre-cooling in cryochamber is permitted.

The specimens shall be taken out from the thermostatic bath and be broken within 10 s maximum. Where the specimens are continuously tested within the period exceeding 10 s after being taken out from the bath, they shall be recooled to the temperature determined experimentally, and the temperature measurement shall be carried out to the moment of impact using a thermocouple inserted into the specimen orifice at least 15 mm deep.

1.3 When determining the percentage of shear area in the fractures of specimens with thickness up to 19 mm inclusive, consideration shall not be given to t (specimen thickness) fracture sections adjacent to the notch of the root and to the edge struck by the hammer. For the specimens with thickness exceeding 19 mm, consideration shall not be given to fracture sections 19 mm long from each side.

After testing, the compliance of the fracture within the account area with one or several types of fractures as shown in Fig. 1.3 shall be determined. If fractures are combined, the total crystalline component area is to be assessed using an approach as accepted for the fracture of type III.

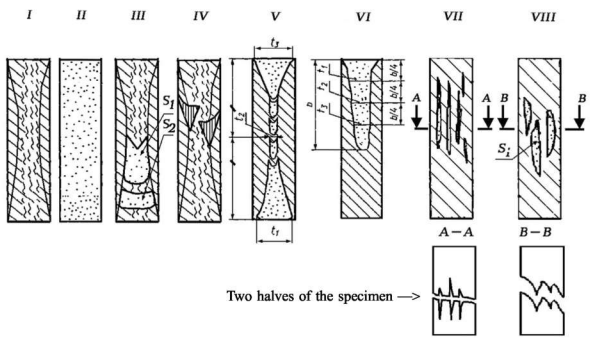

Figure 1.3 Fractures within the Account Area

The account area Π_0 means the fracture area, within which the available cleavage/brittle and shear/fibrous components are evaluated after testing. The dimensions of the account area shall be determined before testing.

The cleavage/brittle and shear/fibrous component areas shall be determined as follows:

the cleavage area Π_{cl} is measured with a manual measuring tool and the percent shear area is calculated;

the same percent shear area B is calculated by the photograph of specimen fracture surface with the help of computer software;

the values obtained from both methods are compared with each other. If the values differ by more than 5%, the measuring and calculation procedure shall be corrected. The value measured by the photograph shall be considered as preferable.

The percent shear area B, in %, is determined by the formula

$$B = (\Pi_0 - \Pi_{cl})/\Pi_0 100\ \% \qquad (1.3)$$

where Π_0 = account fracture area, in mm^2;
Π_{cl} = area of cleavage/brittle fracture spot(s), in mm^2.

The shear area in a fracture looks dull grey with typical "fibres", normally with contraction and plastic deformation in the section, and includes shear lips adjacent to specimen lateral surfaces located at an angle to the specimen notch plane.

The cleavage/brittle area is a part of fracture surface with no contractions or visible signs of plastic deformation. The cleavage/brittle component normally has a crystalline shine; for extra high strength steels, this component may have lighter colours only. The spots of cleavage/brittle component may be both within the notch plane and be located at a significant angle to this plane.

"Arrows" fracture means the triangular fracture areas with alternating strips of finer structure. These areas may be considered as belonging to the shear area, if they are located within shear lips. Otherwise, the fracture area corresponding to this type of fracture shall be referred to shear and cleavage components in the ratio of 1:1, unless any special fractographic examinations are performed.

Alternating fracture means a vertical crystalline band in a fracture with thin junctions of the shear component.

Separations mean the narrow splits, projections and recessions, "tongues" in a fracture, which are parallel to rough metallic surface on the one or both pairs of fracture surfaces. They are formed during testing. The separation surface may include cleavage areas which are not taken into account during fracture assessment.

The procedure for attributing fracture regions to crystalline type (brittle fracture) and for calculation of crystalline component area Π_{cl} according to Fig. 1.3 depending on fracture types is as follows:

I — shear area, dull grey surface, $\Pi_{cl} = 0$, $B = 100\%$.

II — cleavage/brittle area, $\Pi_{cl} = \Pi_0$, $B = 0\%$. If there are shear lips, these shall be not taken into account, if they are not more than 0,5 mm wide per side.

III — separate spots of cleavage/brittle component, $\Pi_{cl} = \Sigma\Pi_i$.

IV — the arrow areas shall be taken into account as a crystalline component with knock-down factor, unless located at within the shear lips: $\Pi_{cl} = 0{,}5\Sigma\Pi_i$.

V — alternating fracture, $\Pi_{cl} = \Pi_0\left(\frac{t_1 + t_3}{2} + t\right)/(2t)$

where t = thickness of a the non-deformed specimen before testing. The shear junctions are not taken into account if crystalline cleavage spots are located throughout the height of the fracture. Otherwise, the fracture is classified as type *III*.

VI — cleavage tab, $\Pi_{cl} = \left(\frac{t_1 + t_2 + t_3}{3}\right)b$

where b = a tab length.

VII — separations perpendicular to the fracture surface are not taken into account as a cleavage area, $\Pi_{cl} = 0$, $B = 100\%$ (both halves of the specimen shall be analyzed). The maximum separation height shall be measured within the fracture plane and reported.

VIII — area of cleavage spots located at an angle to the notch plane shall be taken into account in the projection on the notch plane. In case of significant deviation from the notch plane, both halves of the specimen shall be analyzed to distinguish the fracture of type *VII* and *VIII*.

If non-compliance with the temperature conditions, wrong specimen alignment, misalignment of load application in relation to the concentrator axis and other malfunctions of the impact-test machine have been detected during the tests, as well as if the specimen has proved to be defective or poorly prepared, irrespective of whether it was detected before or after the specimen fracture, the test results shall be considered invalid and repeated tests shall be carried out on the same number of specimens.

The test results shall be recorded to the report containing the information specified in 2.2.1.4 of the SP Guidelines and the following:

maximum impact energy margin during the tests;
load-lifting height;
impact rate.

Test results are presented in the form of the following table:

No.	*T*, in °C	Thickness, in mm	Net height, in mm	Account area, in mm^2	Cleavage area, in mm^2	Fibre, in %	Note

2 DETERMINATION OF CTOD

To determine the CTOD value specimens with a notch and fatigue ptecracked specimens are used. Cutting out of specimens and notching on heat-affected zone (HAZ) shall be carried out after final heat treatment, in this case, the notch location — through-specimen-thickness, and the crack propagation direction shall be transverse to the pipe.

As the test result is considerably determined by the specimen thickness, the latter shall be assigned as far as possible close to the base metal thickness. For pipe metal, especially as regards the transverse specimens, billet straightening is inevitable (refer to Table 2). To limit the plastic deformation additionally induced in the notched zone, the billet straightening in the form of a "gull wing" is recommended (Fig. 2-1). After that the through-billet-thickness mechanical treatment may be carried out.

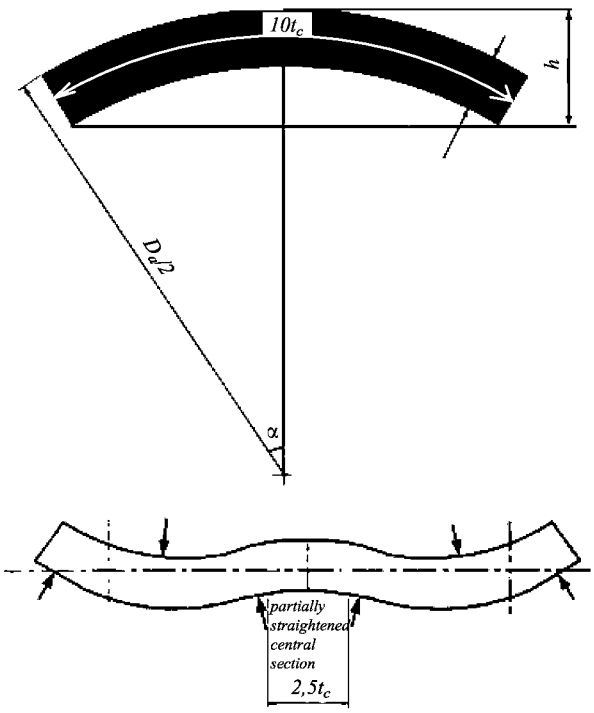

Fig. 2-1
Transverse pipe billet straightening

Lateral pittings up to 20 % of thickness are permitted on specimens, except for the notched zone (at least one thickness to both sides from the notch).

Preference shall be given to bend-type specimens;

the specimen height is equal to the doubled width (Fig. 2-2).

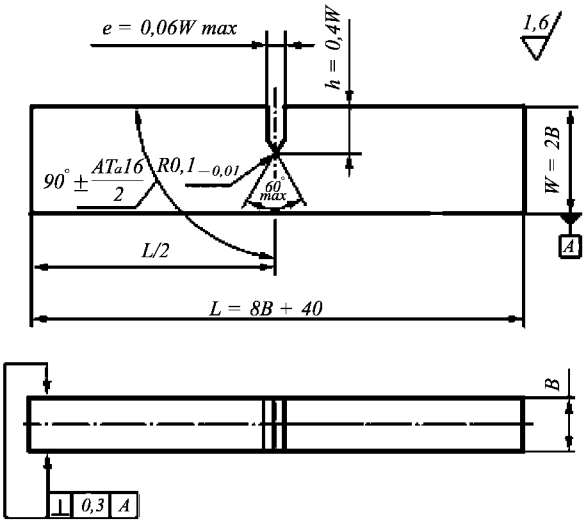

Fig. 2-2
Preferred specimen type for CTOD tests

The specimens shall be tested using testing machine with the crosshead-move-ment rate under quasistatic load providing the stress intensity factor K_f growth within 0,5 — 3,0 MPa·m^{0,5}/s. In the course of the tests, a deformation curve shall be plotted as "load — crack edge opening" coordinate system. The specimen shall be loaded up to total or partial destruction or until the load reaches its maximum value. Verification of compliance with the correctness conditions shall be carried out after test completion.

The angle between the notch line and lateral surfaces of the specimen shall be within the range 90 ± 5°.

When testing the pipe base metal, the preparatory edge milling procedure is recommended to be carried out, as it is described in the welded specimen testing procedure (refer to Seetion 5, Part I "Subsea Pipelines"). The necessity of stress relieving using such method may be determined experimentally on the test specimen.

Таблица 2

Billet straightening properties for three-point bend test

Wall thickness t_c to outside diameter D_a ratio	Height of non-straightened billet h	First procedure: straightening of the whole billet to the height h_1	Second procedure: straightening of billet ends	Thickness of the three-point impact bend test specimen
⩽0,05 ⩽0,07 ⩽0,09	⩽1,3t_c ⩽2,3t_c ⩽3,4t_c	t_c ⩾1,4t_c ⩾2,5t_c	Not required Required Required	⩽0,95t_c ⩽0,95t_c ⩽0,95t_c with permitted pittings
> 0,09	> 3,4t_c	Compact specimens are recommended		

After completion of specimens manufacture the fatigue crack growth at room temperature shall be conducted. The cyclic loading regime shall be chosen in compliance with the three following conditions:

maximum value of F_f — cycle load at the final stage of crack propagation shall not exceed

$$F_f = \frac{B(W-a)^2(\sigma_{yts} + \sigma_{ytp})}{4S} \qquad (2\text{-}1)$$

where B = specimen thickness;
W = specimen height;
a = current length of a crack;
S = span;
σ_{yts}, σ_{ytp} = yield stress and tensile strength of the material at the crack growth temperature;

maximum cyclic value of stress intensity factor K_f shall not exceed

$$K_f/E = 3{,}2\cdot 10^{-4}\ \mathrm{m}^{0,5} \qquad (2\text{-}2)$$

where E = modulus of elasticity;

in tests obtaining the correct K_{1c} values of material the K_f value shall not exceed

$$K_f = 0{,}6\,\frac{\sigma_{yts}}{\sigma_{ys}}\,K_{1c} \qquad (2\text{-}3)$$

where σ_{ys} = material yield stress at test temperature.

For low-alloyed steels, calculations made according to Formula (2.1), as a rule, result in less load values, as compared to those according to Formula (2.2), and the correctness conditions of K_{1c} are not met even at the lowest test temperature. In this case, Formula (2.3) is not used when selecting the load.

The load at the initial stage of fatigue crack growth shall be additionally limited: not exceeding $1{,}3K_f$ — level with the crack equal to the notch depth.

Testing procedure:

to scale deformation curves meeting the standard recommendations to slope angle of the curve elastic segment and to curve dimensions in *Y*-axis direction: to calibrate crack opening sensors;

to mount the specimen on supports, to fit crack opening sensor and to cool up to specified testing temperature;

to load the specimen at the specified crosshead rate. The specimens shall be loaded up to unstable fracture (obvious break of deformation curve) or until obvious exceeding of maximum load. After that the crack opening sensor is removed and complete destruction of the specimen is performed at the test temperature.

to make all necessary measurements in the specimen fracture: length of initial fatigue crack and value of stable crack extension, if any.

The test load shall be measured with an accuracy of at least $\pm 1\,\%$. The crack edges opening shall be measured with an accuracy exceeding $\pm 0{,}003$ mm when measuring the displacements up to 0,3 mm and $\pm 1\%$ with larger displacements. Prior to commencement of testing, the specimen thickness B and height W shall be measured with an accuracy of $\pm 0{,}1\%$. When testing the bend-type specimen, the span shall be within $S = 4W \pm 0{,}2W$ and the mounting accuracy shall be $\pm 1\%$ of S with regard to the load application — notch alignment line. The temperature shall be measured with an accuracy of ± 2 °C, actions shall be taken to the specimen thickness temperature equalization.

Where a pop-in is available, number n is considered significant and the CTOD value shall be determined just for this event if condition $d_n > 5$ % is met, where the value of d_n, in %, shall be determined using graphical plotting (refer to Fig. 2-3) by the formula

$$d_n(F_1) = 100\left(1 - \frac{D_1}{F_1}\left(\frac{F_n - y_n}{D_n + x_n}\right)\right)\% \qquad (2\text{-}4)$$

where F = load;
D = displacement.

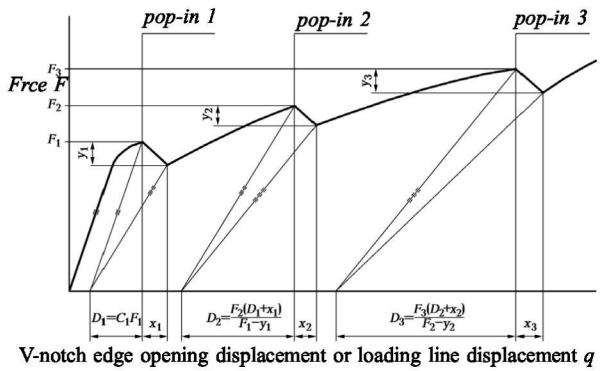

Fig. 2-3
The assessment procedure for pop-in significance on the deformation curve

When analysis of fracture surface shows that load and displacement (crack opening) pop-in is caused by the appearance of non-opened lamination parallel to the plate surface and there are no crystalline type areas in the fracture, that pop-in may not be considered as a critical event.

The fatigue crack length in the fracture shall be measured at nine equidistant points along the specimen cross-section with an accuracy not less than ± 0,25% of the average length. Extreme measurements shall be made at a distance of 1% of the specimen width from the surface. The average length of the initial fatigue crack a_0 shall be calculated as a sum of seven internal measurements and half a sum of two near-surface measurements divided by eight. The difference between any two out of

seven internal crack length measurements shall not exceed 10% of the average crack length.

Checking of a_0/W ratio is additionally required: it shall be within the range of $0{,}45 < a_0/W < 0{,}55$. Calculation of CTOD value (designated as δ in formulae) shall be carried out using the formula

$$\delta = \left[\frac{FS}{BW^{1,5}} f\left(\frac{a_0}{W}\right)\right]^2 \frac{(1-\mu^2)}{2\sigma_{ys}E} + \frac{0{,}4(W-a_0)V_p}{0{,}4W + 0{,}6a_0 + z} \quad (2\text{-}5)$$

where F = load at the selected point on the curve;
V_p = relevant ductile component of displacement;
E, μ = modulus of elasticity and Poisson's ratio of material;
σ_{ys} = yield stress of selected material at the test temperature.

The value of function $f(a_0/W)$ shall be determined by the following ratio:

$$f(a_0/W) = \frac{3(a_0/W)^{0,5}[1{,}99-(a_0/W)(1-a_0/W)(2{,}15-3{,}93a_0/W+2{,}7a_0^2/W^2)]}{2(1+2a_0/W)(1-a_0/W)^{1,5}} \quad (2\text{-}6)$$

The value of σ_{ys} for the test temperature T, in °C, unless known from the experiment, may be determined by the formula

$$\sigma_{ys} = \sigma_{yts} + 10^5/(491 + 1{,}8T) - 189. \quad (2\text{-}7)$$

Test results are recommended to be presented in the form of a table as follows:

Standard No.		Material grade	
Type of metal products		No. of cast	
Condition of material (weld etc.)		No. of plate	
Nominal thickness, in mm		Billet marking	
Type of specimen		Welding procedure No.	
Orientation of crack		Marking of specimen	
Geometrical parameters			
Thickness b, in mm		b after compression, in mm	
Width W, in mm		Overall height C, in mm	
Span S, in mm		Half-height H, in mm	
Notch depth h, in mm		Orifice diameter d, in mm	
Thickness of prismatic edges z, in mm		Semi-distance between orifices h, in mm	
Crack propagation parameters			
Final maximum crack load F_f in kN			
Minimum-maximum load ratio, R		Total number of cycles, N	
Temperature and strength			
Test temperature, in °C		Yield stress σ_{yts}, in MPa	
Tensile strength σ_{ytp}, in MPa		At a test temperature σ_{ys}, in MPa	

Fracture											
	a_1	a_2	a_3	a_4	a_5	a_6	a_7	a_8	a_9	Average	Note
a											
Aa											

Presence of an arrested brittle crack extension		Welding defects	
Metal delamination parallel to the surface		"Steps" in the fracture	
Test results interpretation			
K_Q, MPa$\sqrt{m}$		Critical event	
F_{max}/F_Q		CTOD, mm	
Metallography (for specimens from the heat-affected zone)			
Target structure to the scribe line			

Metallography results	Weld	HAZ at the fusion line	HAZ distant	Base metal	Finding: target structure
%					

3 BEND TESTS

Bend tests on the mandrel are mandatory for the face-, root- and side-bends (side-bend tests shall be carried out for welds only).

Face-bend tests shall be carried out on full-thickness specimens with rolled surface. Pre-deformation between two planes is permitted only for specimens with the inner pipe surface to be extended in tension, as stipulated by the personnel safety requirements. Side-bend straightening of specimens is not recommended.

Where the plate thickness is up to 32 mm, the specimen thickness shall be equal to the plate thickness; where the thickness exceeds 32 mm, it is permitted to carry out specimen planning up to the thickness of 25 mm on one side. The specimen width shall range from 1,6 to 5 thicknesses. The specimen length shall be $L = 2\ (a + d) + 100^{+50}$ mm, where a is the specimen thickness, d is the mandrel diameter.

For side-bend use is made of ground smooth with thickness of 10 mm.

Test specimens shall be taken from the areas near those from which specimens for other tests have been cut out to compare bend test results with other material properties. Sectioning using guillotine shears is not permitted. When mechanical treatment is completed, the specimen edges shall be free from transverse grooves made with the cutter. Roughness of mechanically treated surface shall not exceed R_z 40 micron. Sharp edges shall be rounded to the radius not exceeding 0,1a.

Unless otherwise specified in the regulatory documents on metal products, the mandrel diameter shall comply with those given in Table 3, the mandrel hardness shall be from 55 to 60 HRC along the loading surface. The width of supports shall exceed the specimen width. The diameter of support rolls shall be from 30 to 50 mm. Clear distance between supports, unless otherwise specified in the regulatory documents on metal products, shall be taken equal to $d + 2{,}5a$.

The tests consist of bend loading of specimens by concentrated load at the mid-span between supports at the room temperature (Fig. 3, *a*, *b*).

Table 3

Mandrel diameter during bend tests

Minimum guaranteed yield stress of base metal, in MPa	Face-bend/root-bend mandrel diameter (a is the specimen thickness)	Side-bend mandrel diameter, in mm (specimen thickness is 10 mm)
Not higher than 390	2a	30
420 — 620	4a	40
690	6a	60

In case the specimen is free from visible defects during the test, loading shall be applied until the required bending angle is achieved. When the load is removed, the specimen shall be tested for defects on its tension and side surfaces at the required bending angle.

In case there are visible defects on the specimen in the course of the test, loading shall be stopped. After removal of load the specimen shall be tested for defects on its tension and side surfaces at the achieved bending angle.

Side surfaces, edges and external surface of the specimen curved section shall be examined. Determination of test results regarding permissibility of defects detected shall be carried out in compliance with the regulatory and technical documentation on metal products. Unless otherwise specified, the specimen is considered as having passed the test when it is free from visible fracture, delaminations, tears and cracks with the bend angle α equal to 120°.

The bend angle α, if it is less than 180°, shall be measured in accordance with Fig. 3, *d* after removal of load. The specimen sides shall be bent to an angle of 180° till they are parallel (Fig. 3, *c*). Bending on supports is permitted till the bend angle reaches 140°.

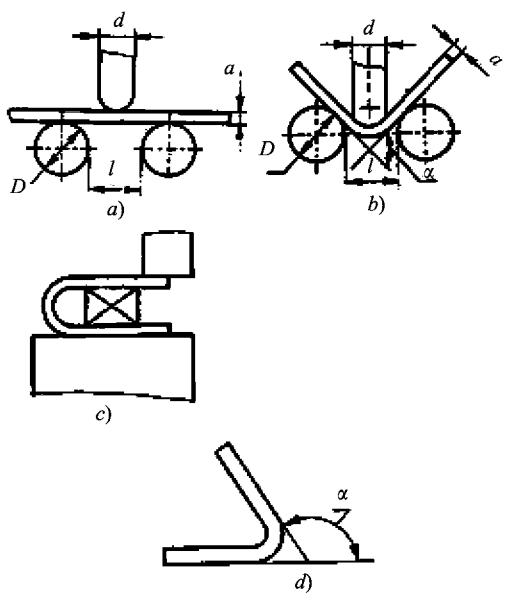

Fig. 3 Bend test

If the bend angle is 180°, some defects specified in 4.8.7.1, Part I "Subsea pipelines" of the SP Rules are accepted.

4 PROCEDURE FOR DETERMINING SULPHIDE STRESS CRACKING RESISTANCE

The tests shall be carried out on three specimens taken from each tested pipe. Unless otherwise specified in the regulatory documents on metal products, the test environment will be a solution containing a sodium chloride aqua solution — 5 % NaCl and glacial acetic acid — 0,5 % CH_3COOH (pH of solution is 2,7) saturated with hydrogen sulphide at the pressure of 0,1 MPa.

The tests shall be carried out at a permanent four-point bend loading of a full-thickness specimen or at tensioning of the cylindrical specimen being soaked in the test solution within 720 h under the stresses of 85% of the specified minimum yield stress for pipes. The acceptance criterion — the absence of cracks proceeding from results of magnetic flaw detection and metallographic examination on macrosections after the test.

5 DETERMINATION OF HYDROGEN-INDUCED CRACKING

The tests shall be carried out on three specimens taken from each tested pipe. Unless otherwise specified in the regulatory documents on metal products, the test environment will be a solution containing sodium chloride aqua solution — 5 % NaCl and glacial acetic acid — 0,5 % CH_3COOH (pH of solution is 2,7) saturated with hydrogen sulphide with the concentration of 3000 ppm at the pressure of 0,1 MPa.

The specimens shall be soaked in the test solution within 96 h, whereupon the quantity of cracks in specimens shall be assessed.

The specimen size shall be 100 x 20 mm x product thickness.

Upon the RS request the quantitative assessment of the absorbed hydrogen (diffusion in glycerin within 72 h at the temperature of 45 °C).

Internal cracking shall be assessed using micrograph method (section cutting and crack measurement), criterion

$$CLR = \frac{\sum a}{W} 100\ \% \leqslant 15\ \%;$$

$$CTR = \frac{\sum b}{T} 100\ \% \leqslant 5\ \%;$$

$$CSR = \frac{\sum ab}{WT} 100\ \% \leqslant 2\ \%$$

where a = length of crack, in mm;
b = width of crack, in mm;
W = specimen length, in mm;
T = specimen width, in mm;

APPENDIX 5

DETERMINATION OF VALUES OF WAVE PARTICLE VELOCITIES AND ACCELERATIONS IN BOTTOM LAYER

1. The components of wave particle velocity and acceleration in bottom layer $V_{w,x}$, $V_{w,z}$, $a_{w,x}$, $a_{w,z}$ are determined by Tables 1-1 to 1-4, depending on:

h — seawater depth in way of the pipeline section in question, in m;

H — wave height with 1 % probability per year, in m;

τ — wave period with 1 % probability per year, in s.

The intermediate values of velocity and acceleration components are determined by linear interpolation.

2. The values of H and τ are determined on the basis of a hydrometeorological engineering survey lengthwise of the subsea pipeline route. The RS Reference Data on Wind and Wave Conditions may be used for specifying the wave height and period with 10^{-2} 1/year probability for those regions of sea water areas (pipeline route sections) wherein these values were determined.

The design values of velocity V_w and acceleration a_w are determined by the formulae:

$$V_w = \sqrt{V_{w,x}^2 + V_{w,z}^2}\,; \qquad (2\text{-}1)$$

$$a_w = \sqrt{a_{w,x}^2 + a_{w,z}^2}\,. \qquad (2\text{-}2)$$

Table 1-1

Horizontal component of velocity $V_{w,x}$, in m/s

Seawater depth h = 10 m					
Wave period τ, in s	Wave height H, in m				
	1	2	3	4	5
5	0,24	0,48	0,72	0,96	1,11
7	0,37	0,74	1,10	1,45	1,75
9	0,43	0,88	1,32	1,74	2,11
11	0,47	0,98	1,48	1,95	2,35
13	0,51	1,06	1,60	2,10	2,52
15	0,53	1,13	1,70	2,22	2,65
Seawater depth h = 20 m					
Wave period τ, in s	Wave height H, in m				
	1	3	6	8	10
5	0,051	0,168	—	—	—
7	0,163	0,492	0,996	1,315	1,514
9	0,235	0,709	1,417	1,863	2,248
11	0,275	0,841	1,690	2,224	2,692
13	0,301	0,932	1,890	2,488	3,011
15	0,319	1.004	2,050	2,695	3,254
Seawater depth h = 30 m					
Wave period τ, in s	Wave height H, in m				
	1	3	6	10	15
5	0,010	0,037	—	—	—
7	0,075	0,229	0,479	0,834	—
9	0,145	0,437	0,881	1,471	2,065
11	0,191	0,575	1,156	1,916	2,744
13	0,219	0,665	1,343	2,230	3,205
15	0,237	0,727	1,481	2,470	3,551

Table 1-1 — continued

Seawater depth h = 40 m					
Wave period τ, in s	Wave height H, in m				
	1	5	10	15	20
5	0,002	0,018	—	—	—
7	0,034	0,182	0,418	—	—
9	0,091	0,462	0,951	1,436	-
11	0,138	0,694	1,393	2,073	2,629
13	0,169	0,852	1,708	2,533	3,246
15	0,189	0,962	1,939	2,877	3,697
Seawater depth h = 50 m					
Wave period τ, in s	Wave height H, in m				
	1	10	15	20	25
5	0,0001	—	—	—	—
7	0,015	0,205	—	—	—
9	0,057	0,609	0,953	—	—
11	0,101	1,027	1,552	2,050	2,344
13	0,133	1,345	2,014	2,650	3,183
15	0,155	1,576	2,357	3,099	3,746
Seawater depth h = 70 m					
Wave period τ, in s	Wave height H, in m				
	5	10	20	25	30
7	0,017	0,049	—	—	—
9	0,111	0,243	—	—	—
11	0,272	0,557	1,177	1,476	—
13	0,427	0,860	1,744	2,177	2,565
15	0,546	1,096	2,196	2,730	3,226
Seawater depth h = 100 m					
Wave period τ in s	Wave height H, in m				
	5	10	20	25	30
7	0,002	0,006	—	—	—
9	0,026	0,060	—	—	—
11	0,104	0,216	0,488	0,642	—
13	0,218	0,442	0,922	1,177	1,435
15	0,330	0,663	1,345	1,693	2,042
Seawater depth h = 125 m					
Wave period τ, in s	Wave height H, in m				
	5	10	20	25	30
7	—	0,001	—	—	—
9	0,008	0,018	—	—	—
11	0,046	0,097	0,230	0,312	—
13	0,123	0,250	0,533	0,691	0,858
15	0,216	0,436	0,893	1,133	1,379
Seawater depth h = 150 m					
Wave period τ, in s	Wave height H, in m				
	5	10	20	25	30
9	0,002	0,006	—	—	—
11	0,020	0,043	0,108	0,151	0,193
13	0,068	0,140	0,305	0,402	0,507
15	0,141	0,285	0,589	0,752	0,923

Table 1-2

Vertical component of velocity $V_{w,z}$, in m/s

Seawater depth h = 10 m					
Wave period τ, in s	Wave height H, in m				
	1	2	3	4	5
5	0,04	0,08	0,11	0,14	0,16
7	0,04	0,07	0,11	0,14	0,16
9	0,03	0,06	0,09	0,12	0,15
11	0,03	0,06	0,09	0,12	0,14
13	0,02	0,05	0,08	0,11	0,14
15	0,02	0,05	0,08	0,11	0,13
Seawater depth h = 20 m					
Wave period τ, in s	Wave height H, in m				
	1	3	6	8	10
5	0,008	0,026	—	—	—
7	0,014	0,042	0,081	0,101	0,111
9	0,014	0,041	0,079	0,100	0,117
11	0,012	0,037	0,072	0,093	0,110
13	0,011	0,033	0,066	0,087	0,105
15	0,010	0,030	0,062	0,083	0,101
Seawater depth h = 30 m					
Wave period τ, in s	Wave height H, in m				
	1	3	6	10	15
5	0,002	0,006	—	—	—
7	0,006	0,019	0,038	0,060	—
9	0,008	0,023	0,046	0,073	0,094
11	0,008	0,023	0,044	0,071	0,095
13	0,007	0,021	0,041	0,066	0,091
15	0,006	0,019	0,038	0,061	0,087
Seawater depth h = 40 m					
Wave period τ, in s	Wave height H, in m				
	1	5	10	15	20
5	—	0,003	—	—	—
7	0,003	0,014	0,030	—	—
9	0,005	0,023	0,046	0,065	—
11	0,005	0,025	0,049	0,069	0,083
13	0,005	0,024	0,047	0,067	0,082
15	0,005	0,022	0,044	0,063	0,079
Seawater depth h = 50 m					
Wave period τ, in s	Wave height H, in m				
	1	10	15	20	25
7	0,001	0,015	—	—	—
9	0,003	0,029	0,043	—	—
11	0,004	0,035	0,051	0,064	0,069
13	0,004	0,035	0,051	0,065	0,075
15	0,003	0,034	0,049	0,062	0,073
Seawater depth h = 70 m					
Wave period τ, in s	Wave height H, in m				
	5	10	20	25	30
7	0,001	0,003	—	—	—
9	0,005	0,011	—	—	—
11	0,009	0,018	0,036	0,043	—
13	0,011	0,021	0,041	0,050	0,056
15	0,011	0,022	0,042	0,050	0,058

Table 1-2 — continued

Seawater depth h = 100 m					
Wave period τ, in s	Wave height H, in m				
	5	10	20	25	30
9	0,001	0,003	—	—	—
11	0,003	0,007	0,015	0,019	—
13	0,005	0,011	0,021	0,026	0,031
15	0,006	0,012	0,024	0,030	0,035
Seawater depth h = 125 m					
Wave period τ, in s	Wave height H, in m				
	5	10	20	25	30
9	—	0,001	—	—	—
11	0,002	0,003	0,007	0,009	—
13	0,003	0,006	0,012	0,015	0,018
15	0,004	0,008	0,016	0,020	0,024
Seawater depth h = 150 m					
Wave period τ, in s	Wave height H, in m				
	5	10	20	25	30
11	0,001	0,001	0,003	0,004	—
13	0,002	0,003	0,007	0,009	0,011
15	0,003	0,005	0,010	0,013	0,016

Table 1-3

Horizontal component of acceleration $a_{w,x}$, in m/s^2

Seawater depth h = 10 m					
Wave period τ, in s	Wave height H, in m				
	1	2	3	4	5
5	0,30	0,60	0,90	1,17	1,33
7	0,32	0,64	0,94	1,22	1,45
9	0,29	0,58	0,86	1,13	1,37
11	0,26	0,52	0,80	1,07	1,32
13	0,23	0,49	0,77	1,04	1,29
15	0,21	0,47	0,75	1,02	1,27
Seawater depth h = 20 m					
Wave period τ, in s	Wave height H, in m				
	1	3	6	8	10
5	0,064	0,211	—	—	—
7	0,146	0,439	0,881	1,149	1,300
9	0,163	0,485	0,950	1,230	1,460
11	0,155	0,463	0,905	1,178	1,416
13	0,142	0,427	0,851	1,119	1,364
15	0,129	0,395	0,808	1,078	1,326
Seawater depth h = 30 m					
Wave period τ, in s	Wave height H, in m				
	1	3	6	10	15
5	0,013	0,046	—	—	—
7	0,067	0,205	0,429	0,741	—
9	0,101	0,304	0,609	1,005	1,372
11	0,108	0,324	0,643	1,046	1,459
13	0,105	0,314	0,621	1,009	1,426
15	0,098	0,294	0,585	0,961	1,381

Table 1-3 — continued

Seawater depth h = 40 m					
Wave period τ, in s	Wave height H, in m				
	1	5	10	15	20
5	0,003	0,023	—	—	—
7	0,030	0,163	0,374	—	—
9	0,064	0,322	0,660	0,985	—
11	0,079	0,393	0,782	1,145	1,421
13	0,081	0,404	0,797	1,159	1,456
15	0,079	0,391	0,770	1,123	1,426
Seawater depth h = 50 m					
Wave period τ, in s	Wave height H, in m				
	1	10	15	20	25
5	0,001	—	—	—	—
7	0,013	0,184	—	—	—
9	0,040	0,424	0,661	—	—
11	0,058	0,582	0,874	1,141	1,282
13	0,064	0,639	0,945	1,226	1,447
15	0,065	0,640	0,942	1,220	1,453
Seawater depth h = 70 m					
Wave period τ, in s	Wave height H, in m				
	5	10	20	25	30
7	0,015	0,044	—	—	—
9	0,078	0,170	—	—	—
11	0,155	0,318	0,668	0,833	—
13	0,206	0,414	0,832	1,031	1,203
15	0,228	0,454	0,898	1,105	1,292
Seawater depth h = 100 m					
Wave period τ, in s	Wave height H, in m				
	5	10	20	25	30
7	0,001	0,005	—	—	—
9	0,018	0,042	—	—	—
11	0,059	0,123	0,279	0,365	—
13	0,105	0,213	0,444	0,566	0,688
15	0,138	0,277	0,560	0,703	0,845
Seawater depth h = 125 m					
Wave period τ, in s	Wave height H, in m				
	5	10	20	25	30
7	—	0,001	—	—	—
9	0,005	0,013	—	—	—
11	0,026	0,055	0,131	0,178	—
13	0,059	0,121	0,257	0,334	0,413
15	0,091	0,183	0,373	0,473	0,575
Seawater depth h = 150 m					
Wave period τ, in s	Wave height H, in m				
	5	10	20	25	30
9	0,002	0,004	—	—	—
11	0,011	0,025	0,062	0,086	—
13	0,033	0,068	0,148	0,194	0,244
15	0,059	0,119	0,246	0,315	0,386

Table 1-4

Vertical component of acceleration $a_{w,z}$, in m/s^2

Seawater depth h = 10 m					
Wave period τ, in s	Wave height H, in m				
	1	2	3	4	5
5	0,05	0,10	0,15	0,18	0,21
7	0,03	0,07	0,11	0,14	0,17
9	0,03	0,05	0,09	0,12	0,15
11	0,02	0,05	0,08	0,11	0,14
13	0,02	0,04	0,07	0,10	0,13
15	0,01	0,04	0,07	0,10	0,13
Seawater depth h = 20 m					
Wave period τ, in s	Wave height H, in m				
	1	3	6	8	10
5	0,010	0,033	—	—	—
7	0,013	0,039	0,074	0,089	0,103
9	0,010	0,029	0,057	0,075	0,091
11	0,007	0,023	0,048	0,064	0,080
13	0,006	0,019	0,042	0,058	0,074
15	0,005	0,017	0,039	0,054	0,069
Seawater depth h = 30 m					
Wave period τ, in s	Wave height H, in m				
	1	3	6	10	15
5	0,002	0,007	—	—	—
7	0,006	0,017	0,035	0,055	—
9	0,005	0,016	0,033	0,050	0,068
11	0,004	0,013	0,026	0,042	0,061
13	0,003	0,011	0,022	0,037	0,055
15	0,003	0,009	0,019	0,033	0,050
Seawater depth h = 40 m					
Wave period τ, in s	Wave height H, in m				
	1	5	10	15	20
5	-	0,003	—	—	—
7	0,002	0,013	0,028	—	—
9	0,003	0,017	0,033	0,046	—
11	0,003	0,015	0,028	0,040	0,050
13	0,002	0,012	0,024	0,035	0,045
15	0,002	0,010	0,020	0,031	0,041
Seawater depth h = 50 m					
Wave period τ, in s	Wave height H, in m				
	1	10	15	20	25
7	0,001	0,013	—	—	—
9	0,002	0,021	0,031	—	—
11	0,002	0,020	0,030	0,036	0,041
13	0,002	0,017	0,025	0,032	0,039
15	0,001	0,015	0,022	0,029	0,035
Seawater depth h = 70 m					
Wave period τ, in s	Wave height H, in m				
	5	10	20	25	30
7	0,001	0,003	—	—	—
9	0,004	0,008	—	—	—
11	0,005	0,011	0,021	0,025	0,000
13	0,005	0,011	0,020	0,024	0,027
15	0,005	0,009	0,017	0,021	0,025

Table 1-4 — continued

Seawater depth h = 100 m					
Wave period τ, in s	Wave height H, in m				
	5	10	20	25	30
9	0,001	0,002	—	—	—
11	0,002	0,004	0,009	0,011	—
13	0,003	0,005	0,011	0,013	0,015
15	0,003	0,005	0,010	0,013	0,015
Seawater depth h = 125 m					
Wave period τ, in s	Wave height H, in m				
	5	10	20	25	30
9	—	0,001	—	—	—
11	0,001	0,002	0,004	0,005	—
13	0,001	0,003	0,006	0,008	0,009
15	0,002	0,003	0,007	0,009	0,010
Seawater depth h = 150 m					
Wave period τ, in s	Wave height H, in m				
	5	10	20	25	30
11	—	0,001	0,002	0,003	—
13	0,001	0,002	0,003	0,004	0,005
15	0,001	0,002	0,004	0,006	0,007

APPENDIX 6

DETERMINATION OF FACTORS TO CALCULATE WAVE LOADS[1]

1. Drag and inertia factors c_d and c_i for wave particle flow perpendicular to pipeline sections shall mainly depend on the Keulegan-Carpenter number *KC*, the relative roughness *k* of the pipeline surface, and shall be calculated according to the diagrams in Figs. 1-1 and 1-2.

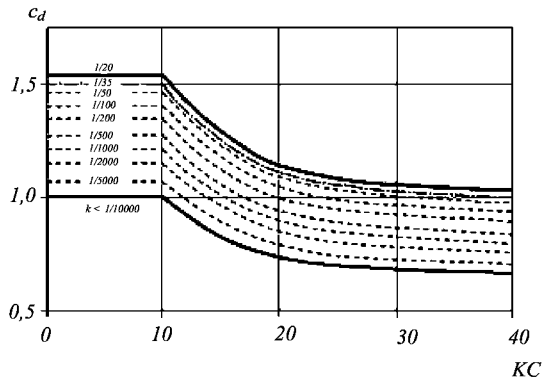

Fig. 1-1
Factor c_d in relation to the Keulegan-Carpenter number, *KC*, and relative roughness, *k*, of the pipeline surface

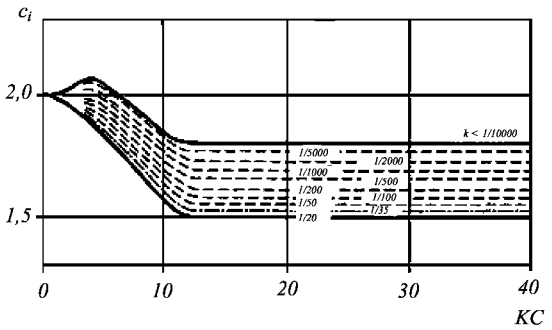

Fig. 1-2
Factor c_i in relation to the Keulegan-Carpenter number, *KC*, and relative roughness, *k*, of the pipeline surface

The Keulegan-Carpenter number *KC* shall be determined by the formula:

$$KC = V_w \tau / D_a \qquad (1)$$

where V_w = water particle velocity, in m/s (refer to 2.6.2, Part I "Subsea Pipelines");
τ = wave period, in s (refer Appendix 5);
D_a = refer to Formulae (2.5.1-1), (2.5.1-2) and (2.5.1-3), Part I "Subsea Pipelines", in m.

2. For pipelines lying at distance *d*, in m, (refer to Fig. 2) above the seabed, c_d and c_i factors are determined by the formulae:

$$c_d(d/D_a) = c_d + (c_{db} - c_d)e^{-2,5d/D_a}; \qquad (2\text{-}1)$$

$$c_i(d/D_a) = c_i + (c_{ib} - c_i)e^{-2,5d/D_a} \qquad (2\text{-}2)$$

$$\text{where } \begin{cases} c_{db} = 1,8 + 0,136KC & \text{at } 0 \leqslant KC \leqslant 5; \\ c_{db} = 1,25 + 2,14 \cdot 10^{-9}(KC - 160)^4 & \text{at } KC > 5 \end{cases} \qquad (2\text{-}3)$$

$$\begin{cases} c_{ib} = 3,3 - 0,0375KC & \text{at } 0 \leqslant KC \leqslant 8; \\ c_{ib} = 1,742KC^{-0,267} & \text{at } KC > 8. \end{cases} \qquad (2\text{-}4)$$

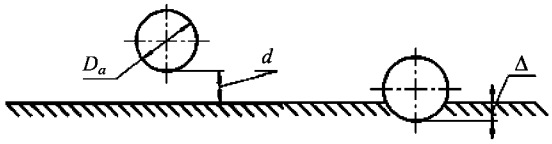

Fig. 2
Diagram of a pipeline lying at distance near the seabed

3. For partially buried pipelines the influence of the burial depth Δ (refer to Fig. 2) on the c_d and c_i factors shall be determined in accordance with Fig. 3.

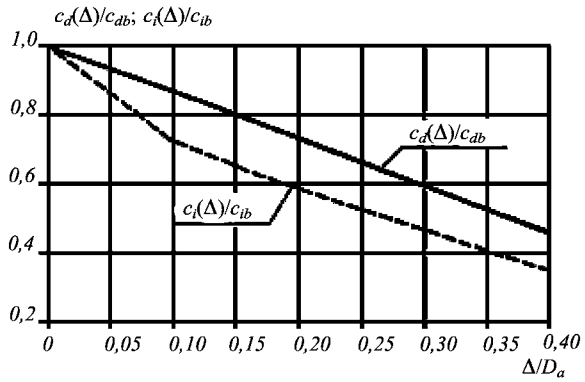

Fig. 3
c_d and c_i factor ratio in relation to the relative pipeline burial Δ/D_a

4. For pipelines located in open trenches (refer to Fig. 4), the influence of trench depth δ_t, in m, and slope S_t on c_a and c_i factors is determined in accordance with Table 4.

[1]Appendix is prepared according to the regulations of a recognized classification society and is a recommendation only.

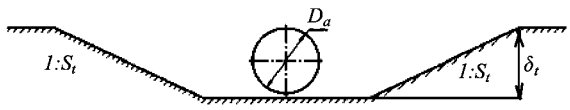

Fig. 4
Diagram of a pipeline in open trenches

Table 4

Influence of open trenches on c_d and c_i factors

δ_t/D_a	0,5	1,0	1,0
S_t	5	5	3
$c_d(\delta_t,s_t)/c_{db}$	0,8	0,7	0,6
$c_i(\delta_t,s_t)/c_{ib}$	0,9	0,8	0,75

5. Factor c_v shall be determined from the formulae:

$$\begin{cases} c_v = 5{,}05 & \text{at } 0 \leqslant KC \leqslant 5{,}335 \\ c_v = 1{,}3 - 0{,}105\,\dfrac{(KC-80)}{KC^{0,5}} & \text{at } 5{,}335 < KC \leqslant 80 \quad (5) \\ c_v = -KC \cdot 0{,}001667 + 1{,}4333 & \text{at } KC > 80 \end{cases}$$

6. The influence of a small distance d, m, between pipeline section and the sea bottom on the near bottom lift factor c_v shall be determined by the formula:

$$c_v(d/D_a) = c_v e^{-2,5d/D_a}. \quad (6)$$

7. For partially buried pipelines the influence of the burial depth Δ, in m, on c_v factor shall be determined from Fig. 7.

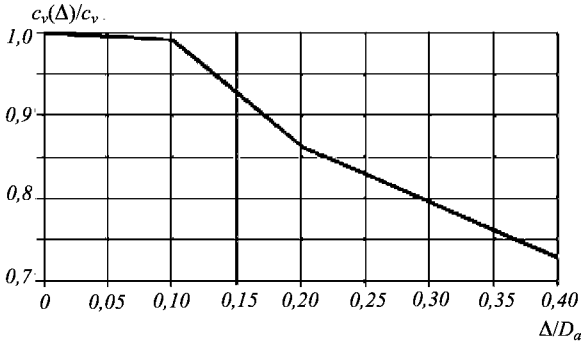

Fig. 7
$c_v(\Delta)/c_v$ factor in relation to the relative pipeline burial Δ/D_a

8. For pipelines in open trenches, the influence of trench depth δ_t, in m, and slope S_t on c_v factor shall be determined in accordance with Table 8.

Table 8

Influence of open trenches on c_v value

δ_t/D_a	0,5	1,0	1,0
S_t	5	5	3
$c_v(\delta_t,s_t)/c_v$	0,85	0,7	0,65

9. In case of combined linear current and wave loads the c_{db}, c_{ib}, c_v factors are corrected depending on the design current velocity and design wave particle velocity — ratio β (refer 2.5 and 2.6, Part I "Subsea pipelines"), which is equal to $\beta = V_c/V_w$, in accordance with Fig. 9-1 to 9-3.

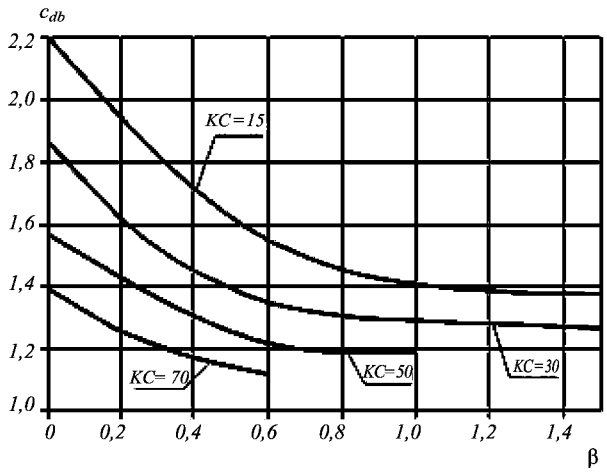

Fig. 9-1
Factor c_{db} in relation to factor β

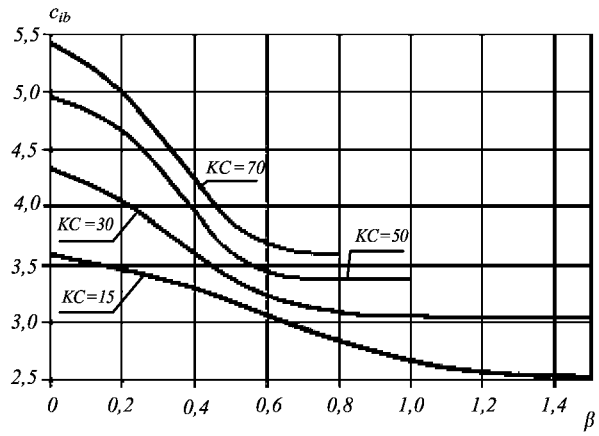

Fig. 9-2
Factor c_{ib} in relation to factor β

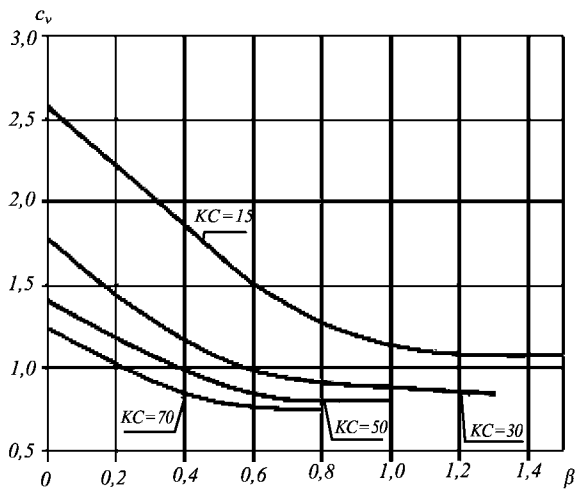

Fig. 9-3
Factor c_v in relation to factor β

The resultant $c_{db}(\beta)$ and $c_{ib}(\beta)$ values will be true for subsea pipelines lying at distance *d*, in m, above the seabed, for partially buried pipelines and pipelines in open trenches.

APPENDIX 7

MODELS OF SUBSEA PIPELINE DYNAMIC RESPONSE TO VORTEX-INDUCED VIBRATIONS[1]

1 IN-LINE RESPONSE MODEL

1.1 The in-line vortex-induced vibrations (VTV) induced stress range S_{IL} shall be calculated by the formula

$$S_{IL} = 2A_{IL}\frac{A_y}{D_a}\psi_{\alpha,IL}\gamma_s \qquad (1.1)$$

where A_{IL} = unit stress amplitude (stress due to unit diameter in-line mode shape deflection $A_y = D_a$);
A_y/D_a = the maximum in-line VIV response amplitude (relative), which depends on the reduced velocity V_R and the stability parameter K_S;
$\psi_{\alpha,IL}$ = the correction factor for current flow ratio α;
γ_s = the safety factor to be multiplied to the stress range (γ_s = 1,05).

1.2 When calculating relative vibration amplitude A_y/D_a the design values for the reduced velocity and stability parameter shall be applied:

$$V_{Rd} = V_R\gamma_f; \qquad (1.2\text{-}1)$$

$$K_{sd} = \frac{K_S}{\gamma_k} \qquad (1.2\text{-}2)$$

where γ_f and γ_k = safety factors related to the natural frequency and damping respectively. In the absence of experimental data it is recommended to take γ_f = 1,2; γ_k = 1,3.

1.3 Pipeline dynamic response model in the $A_y/D_a - V_R$ coordinates shall be designed in accordance with the diagram in Fig. 1.3.

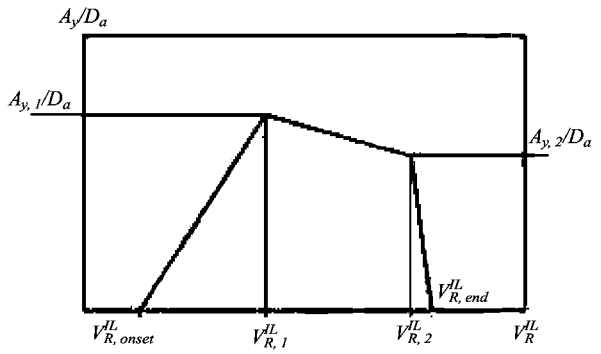

Fig. 1.3
Response model generation principle

1.4 The response model is constructed from the coordinates in Fig 1.3 and shall be determined by the formulae:

$$V^{IL}_{R,onset} = \begin{cases} (1{,}0/\gamma_{on}) & \text{for } K_{Sd} < 0{,}4 \\ \left(\dfrac{0{,}6 + K_{Sd}}{\gamma_{on}}\right) & \text{for } 0{,}4 < K_{Sd} < 1{,}6 \\ (2{,}2/\gamma_{on}) & \text{for } K_{Sd} > 1{,}6 \end{cases}$$

$$V^{IL}_{R,1} = 10\left(\frac{A_{y,1}}{D_a}\right) + V^{IL}_{R,onset};$$

$$V^{IL}_{R,2} = V^{IL}_{R,end} - 2\left(\frac{A_{y,2}}{D_a}\right),$$

$$V^{IL}_{R,end} = \begin{cases} 4{,}5 - 0{,}8K_{Sd} & \text{for } K_{Sd} < 1{,}0 \\ 3{,}7 & \text{for } K_{Sd} \geqslant 1{,}0 \end{cases}$$

where $R_{I\theta,1}(I_c, \theta_{rel})$ and $R_{I\theta,2}(I_c)$ = reduction factors to account for the effect of the turbulence intensity and angle of attack (in radians) for the flow, which are determined as follows:

$$R_{I\theta,1} = 1 - \pi^2\left(\frac{\pi}{2} - \sqrt{2}\,\theta_{rel}\right)(I_c - 0{,}03) \qquad 0 \leqslant R_{I\theta,1} \leqslant 1; \qquad (1.4\text{-}1)$$

$$R_{I\theta,2} = 1 - \frac{(I_c - 0{,}03)}{0{,}17} \qquad 0 \leqslant R_{I\theta,2} \leqslant 1; \qquad (1.4\text{-}2)$$

$\psi_{\alpha,IL}$ = reduction factor to account for reduced in-line VIV in wave dominated conditions:

$$\psi_{\alpha,IL} = \begin{cases} 0{,}0 & \text{for } \alpha < 0{,}5 \\ (\alpha - 0{,}5)/0{,}3 & \text{for } 0{,}5 < \alpha < 0{,}8; \\ 1{,}0 & \text{for } \alpha > 0{,}8 \end{cases} \qquad (1.4\text{-}3)$$

γ_{on} = 1,10 = safety factor for the initial value V_R;
I_c = refer to 2.7.5.4 Part I "Subsea Pipelines";
α = refer to 2.7.5.3 Part I "Subsea Pipelines".

2 CROSS-FLOW RESPONSE MODEL

2.1 The cross-flow vortex-induced vibrations (VIV) induced stress range S_{CF} shall be determined by the following formula:

[1]Appendix is prepared according to the regulations of a recognized classification society and is a recommendation only.

$$S_{CF} = 2A_{CF}\frac{A_z}{D_a}R_k\gamma_s \qquad (2.1)$$

where A_{CF} = unit stress amplitude (stress due to unit diameter cross-flow mode shape deflection $A_z = D_a$);
A_z/D_a = relative cross-flow VIV amplitude in combined current and wave flow conditions, which is taken in accordance with diagrams specified in Fig. 2.2;
R_k = the amplitude reduction factor due to damping;
γ_s = the safety factor to be multiplied on the stress range (γ_s = 1,05).

2.2 Model of pipeline dynamic response in the $A_z/D_a - V_R$ coordinates is constructed in accordance with the diagram specified in Fig. 2.2.

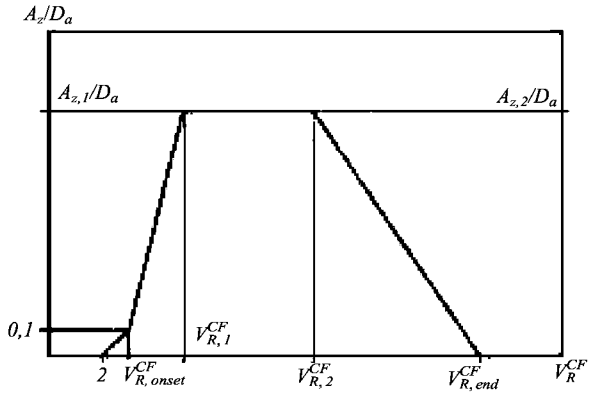

Fig. 2.2
Basic dynamic cross-flow response model principle

2.3 Coordinates of points on the broken line specified in Fig. 2.2 shall be determined by the formulae:

$$V^{CF}_{R,onset} = \frac{3\psi_{proxi,\,onset}\,\psi_{trench,\,onset}}{\gamma_{on}};$$

$$V^{CF}_{R,1} = 7 - \frac{(7 - V^{CF}_{R,onset})}{1,15}\left(1,3 - \frac{A_{z,1}}{D_a}\right);$$

$$V^{CF}_{R,2} = V^{CF}_{R,\text{end}} - \left(\frac{7}{1,3}\right)\left(\frac{A_{z,1}}{D_a}\right), \quad V^{CF}_{R,end} = 16;$$

where $\psi_{proxi,\,onset}$ = correction factor accounting for the seabed proximity

$$\psi_{proxi,\,onset} = \begin{cases} \frac{1}{5}\left(4 + 1,25\frac{d}{D_a}\right) & \text{for } \frac{d}{D_a} < 0,8 \\ 1,0 & \text{for } \frac{d}{D_a} \geqslant 0,8 \end{cases}; \qquad (2.3\text{-}1)$$

$\psi_{trench,\,onset}$ = correction factor for onset cross-flow due to the effect of pipe in trench (refer to Fig. 2.3).

$$\psi_{trench,\,onset} = 1 + 0,5\left(\frac{\Delta_0}{D_a}\right)$$

where Δ_0/D_a = the relative trench depth determined by the formula:

$$\frac{\Delta_0}{D_a} = \frac{1,25\delta_t - d}{D_a}\left(0 \leqslant \frac{\Delta_0}{D_a} \leqslant 1\right). \qquad (2.3\text{-}3)$$

$(f_{n+1,\,CF}/f_{n,\,CF})$ = the cross-flow frequency ratio for two consecutive (contributing) cross flow modes.

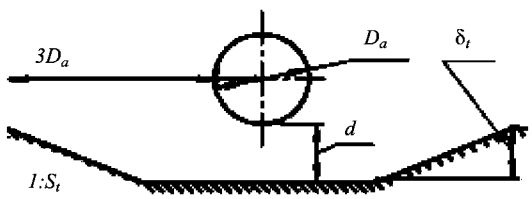

Fig. 2.3
Location of pipes in trench

2.4 The characteristic amplitude response for cross-flow VIV may be reduced due to the effect of damping. The reduction factor R_k is determined by the following ratio:

$$R_k = \begin{cases} 1 - 0,15K_{Sd} & \text{for } K_{Sd} \leqslant 4 \\ 3,2K_{Sd}^{-1,5} & \text{for } K_{Sd} > 4 \end{cases}. \qquad (2.4)$$

$$\left(\frac{A_{z,1}}{D_a}\right) = \left(\frac{A_{z,2}}{D_a}\right) = \begin{cases} 0,9 & \text{for } \alpha > 0,8 \quad \left(\frac{f_{n+1,\,CF}}{f_{n,\,CF}}\right) < 1,5 \\ 0,9 + 0,5\left(\frac{f_{n+1,\,CF}}{f_n} - 1,5\right) & \text{for } \alpha > 0,8 \quad 1,5 \leqslant \left(\frac{f_{n+1,\,CF}}{f_{n,\,CF}}\right) \leqslant 2,3 \\ 1,3 & \text{for } \alpha > 0,8 \quad \left(\frac{f_{n+1,\,CF}}{f_n}\right) > 2,3 \\ 0,9 & \text{for } \alpha \leqslant 0,8 \quad KC > 30 \\ 0,7 + 0,01(KC - 10) & \text{for } \alpha \leqslant 0,8 \quad 10 \leqslant KC \leqslant 30 \\ 0,7 & \text{for } \alpha \leqslant 0,8 \quad KC < 10 \end{cases}$$

APPENDIX 8

BASIC REQUIREMENTS FOR SUBSEA STEEL PIPELINE STRENGTH TESTED UNDER SEISMIC LOADS

1 INITIAL SEISMIC LOADS

1.1 Basic value to characterize seismic load is the design measure of earthquake intensity I with the respective frequency of occurrence.

Calculation of SLE using linear spectral theory is based on linear spectral density:

$$S^H(\omega) = \frac{2}{\pi}\alpha \frac{m^2 + \omega^2}{m^4 + 2a\omega^2 + \omega^4} \quad (1.1)$$

where α, θ = spectral density factors;
$\alpha = 6 — 8{,}5\ c^{-1}$;
$\theta = 14 — 20\ c^{-1}$;
$m^2 = \alpha^2 + \theta^2$;
$a = \alpha^2 - \theta^2$.

1.2 Spectral density of a random function of seismic ground movement with the respective measure of earthquake intensity I is presented as Formula (1.2) (refer to Fig. 1.2).

$$S(\omega) = DS^H(\omega). \quad (1.2)$$

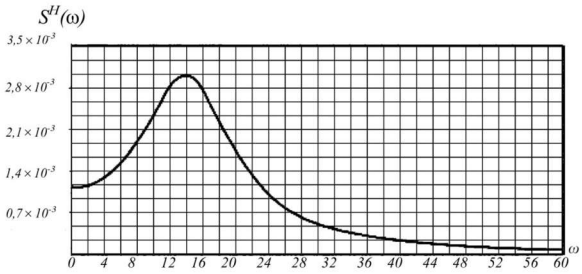

Fig. 1.2 Spectral density $S^H(\omega)$ (with the spectral density factors $\alpha = 6\ c^{-1}$; $\theta = 14\ c^{-1}$ and dispersion $D = 0{,}0625\ m^2/s^2$)

Dispersion values D for the magnitude 7, 8 and 9 earthquake are specified in Table 1.2

Table 1.2

Measure of earthquake intensity, I	D, in m^2/s^2
7	0,0625
8	0,25
9	1,00

1.3 Calculation of non-linear impact with respect to the Ductility level earthquake (DLE) is based on the accelerogram of standard earthquake with the respective measure of earthquake intensity.

Spectral density factors a and 8 may be taken within the ranges specified in 1.1, dispersion D is determined according to the measure of earthquake intensity shown in Table 1.2. The precise factor values may be obtained by processing the earthquake accelerogram for the region in question.

The peak ground acceleration values according to the measure of earthquake intensity shall correspond with Table 1.3.

Table 1.3

Peak ground acceleration values

Measure of earthquake intensity, I	7	8	9	10
Seismic acceleration a_c, in cm/s^2	100	200	400	800

2 SUBSEA PIPELINE PARAMETERS TO BE CONSIDERED IN SEISMIC STABILITY ANALYSIS

2.1 When computation modeling the following parameters of the subsea pipeline and its routes shall be considered:

pipe internal diameter;
pipe wall thickness;
pipe material density;
pipe weight coating thickness;
pipe weight coating density;
pipe burial depth (a distance between the subsea pipeline upper section and the seabed);
internal pressure of the transported product;
pipe dumping width and height;
mechanical-and-physical properties (specific weight) of the pipeline dumping;
pipe material "stress — deformation" diagram;
sea depth in the specified area.

3 SEABED SOIL PARAMETERS[1]

3.1 Seabed soil parameters are obtained based on the results of geotechnical tests, which determine:

depth of the respective soil layer;

soil layer strength parameters, which usually include: soil density, Young's modulus, cohesion and angle of friction.

3.2 In the absence of seabed soil strength characteristics data, the soil characteristics according to their type may be taken in compliance with the following algorithm:

3.2.1 Lateral (horizontal) dynamic stiffness K_L, in MPa, is determined by the formula

$$K_L = \Delta F_L / \Delta\delta_L \qquad (3.2.1\text{-}1)$$

where ΔF_L = dynamic horizontal force between pipe and soil per unit length of pipe, kN/m;
$\Delta\delta_L$ = associated vertical displacement of the pipe, in m.

For determination of K_L, the following expression may be applied:

$$K_L = 0{,}76G(1 + \nu_g), \qquad (3.2.1\text{-}2)$$

where G = shear modulus, in MPa;
ν_g = the Poisson's ratio.

3.2.2 For the vertical dynamic stiffness K_V, in MPa, the following expression may be applied

$$K_V = \frac{0{,}88G}{1-\nu_g}. \qquad (3.2.2)$$

3.2.3 Soil stiffness may be evaluated from the maximum shear modulus $G_{\max}$ of the soil.

$$G_{\max} = 625\frac{OCR^{k_s}}{0{,}3 + 0{,}7e_s^2}\sqrt{\sigma_a\sigma_s} \qquad (3.2.3)$$

where σ_s = mean effective stress in soil, in kPa;
σ_a = atmospheric pressure (100 kPa);
e_s = void ratio.
OCR = over consolidation ratio for clayey soils, to be set equal to 1,0 for sands.
k_s = factor determined experimentally depending on the soil plasticity index I_p to be obtained from diagram specified in Fig. 3.2.3.

3.2.4 The plasticity index I_p shall be obtained by means of soil geotechnical tests under the requirements of current standards, e.g., GOST 5180-84 and GOST 25100-95.

For clayey soils the plasticity index I_p may be determined accordig Table 3.2.4.

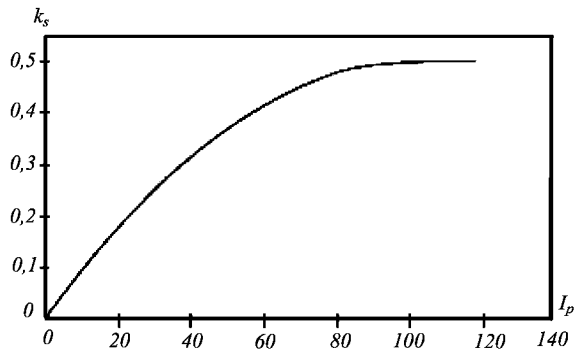

I_p — plasticity index

Fig. 3.2.3 Dependence of k_s from plasticity index I_p

Table 3.2.4

Type of clayey soil	Plasticity index I_p	Content of sand particles (2 — 0,5 mm), % by mass
Sandy loam:		
sandy	1 — 7	⩾50
silty	1 — 7	< 50
Clay loam:		
light sandy loam	7 — 12	⩾40
light silty loam	7 — 12	< 40
heavy sandy loam	12 — 17	⩾40
heavy silty loam	12 — 17	< 40
Clay:		
light sandy clay	17 — 27	> 40
light silty clay	17 — 27	< 40
heavy	> 27	Not regulated

4 COMPUTATION SIMULATION

4.1 Computation scheme involves the finite element modelling which takes into account pipe material properties, weight coating parameters, soil characteristics and sea water effect for three pipeline section types:

shore approach;

linear section of unburied subsea pipeline, including that with dumping;

linear section of buried subsea pipeline.

Typical finite element model structures are shown in Figs. 4.1.1 to 4.1.3.

4.2 Finite element model parameters.

4.2.1 The recommended mesh parameters may be taken as follows:

horizontal longitudinal size of computation modeling area — (180 — 200)D_a;

[1]Section of the Appendix is prepared based on the regulations of a recognized classification society and is a recommendation only.

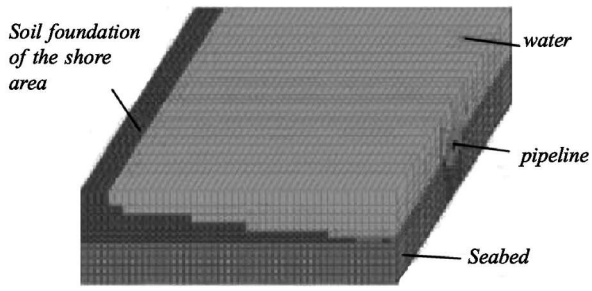

Fig. 4.1-1
Typical finite element model structure
of the subsea pipeline shore approach

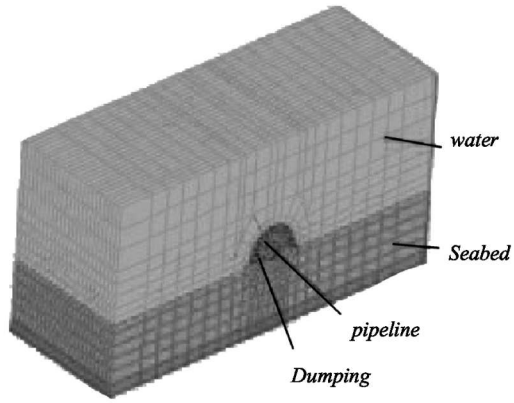

Fig. 4.1-2
Typical finite element model structure
of the non-linear unburied subsea pipeline

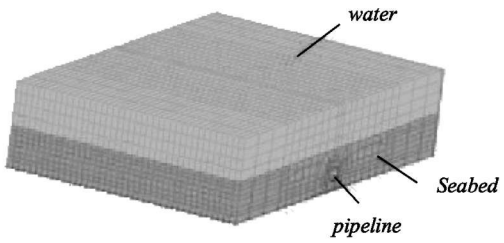

Fig. 4.1-3
Typical fi nite element model structure
of linear buried subsea pipeline to be continued with dumping

vertical sub-size of the area between the bottom and upper surface of the modeling area — min((20 — 25)D_a, H); where D_a is the external pipe diameter and H is the sea depth;

horizontal cross-sectional area — (90 — 100)D_a;

vertical sub-size of the area between the bottom and lower surface of the model area — (25 — 30)D_a;

peripheral mesh size along horizontal and vertical edges of the model — D_a;

inner cross-sectional area of the pipe — (0,02 — 0,025)D_a;

mesh size along the pipe — (0,04 — 0,05)D_a.

4.2.2 Finite element types to be applied:

for a pipe — shell elements with the possibility to consider physical and geometrical non-linearity;

for soil — solid elements with the possibility to consider physical non-linearity of the soil behaviour according to the Ducker-Prager model;

for liquid — solid elements with the possibility to consider physical non-linearity;

for weight coating — solid elements;

for considering pipeline-soil interaction — friction element — one solid element or two solid elements.

5 CALCULATION PARAMETERS

5.1 Seismic stability of a subsea pipeline shall be calculated applying the following methods:

linear spectral method for SLE;

direct dynamic method for DLE.

5.2 Linear spectral method.

5.2.1 The SLE impact on the given subsea pipeline section shall be calculated in the following order (refer also to 5.4):

.1 characteristic points of pipeline deflected mode analysis shall be chosen;

.2 amplitude-frequency characteristics shall be drawn up for deformations within the chosen characteristic points $\varepsilon_{i(\omega)}$, where ω is the frequency of induced seismic load;

.3 spectral deformation densities in i-point shall be calculated as follows:

$$S_{\varepsilon_i}(\omega) = \varepsilon_i^2(\omega) S_I(\omega) \qquad (5.2.1.3)$$

where $S_I(\omega)$ = the design spectral density of seismic load with the measure of earthquake intensity I;

.4 dispersion of deformations in the i-point shall be calculated as follows:

$$D_{\varepsilon_i} = \int_0^\infty S_{\varepsilon_i}(\omega) d\omega; \qquad (5.2.1.4)$$

.5 the required design deformation value shall be calculated as follows:

$$\varepsilon_{i,p} = 3\sqrt{D_{\varepsilon_i}}. \qquad (5.2.1.5)$$

5.3 Dynamic design analysis method (time history analysis method)

Direct dynamic method is intended to fully solve the equation of the sub-sea pipeline movement in the specified area under the effect of earthquake with the measurement of intensity I, set accelerogram within the time period of at least 10 s. Moreover, the calculation shall take into account physical non-linearity of the pipeline material and soil, as well as geometrical non-

linearity of all system elements. The maximum deformation values obtained in the process of implementation may be taken as design parameters to be used in the criteria.

5.4 Flowchart of determining seismic loads for unburied subsea pipeline using linear spectral method (refer to Fig. 5.4).

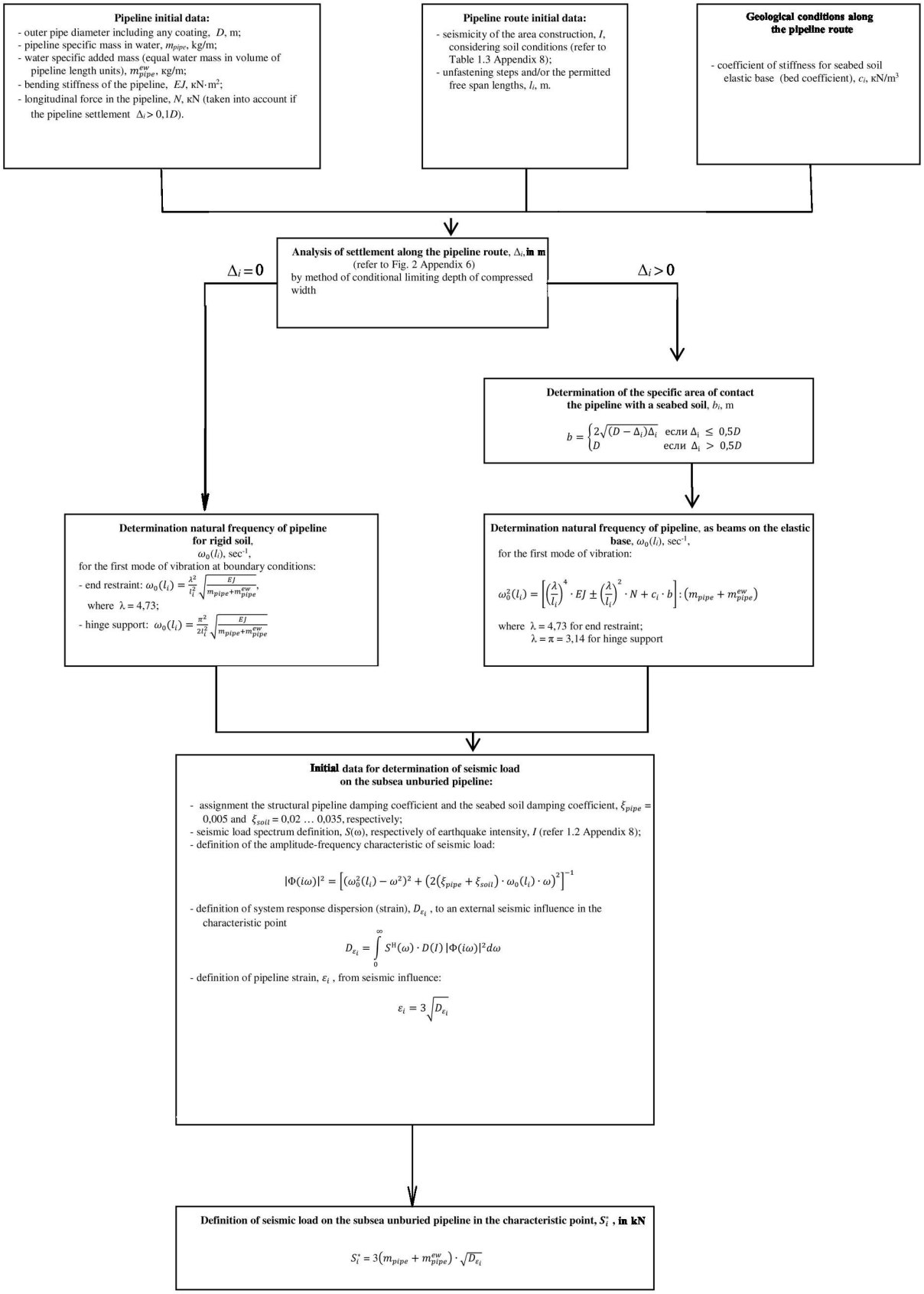

Fig. 5.4

APPENDIX 9

STRENGTH AND STABILITY OF RISER PIPES MADE OF COMPOSITE MATERIALS[1]

1 LOCAL STRENGTH CRITERIA FOR RISER PIPES MADE OF COMPOSITE MATERIALS

1.1 General.

1.1.1 The main structural element of riser pipes made of composite materials is a ply representing one of the armoring material (fabric, tape, roving, fiber, etc.) bounded and cured.

1.1.2 Physical relations of the composite ply considering the ambient temperature and humidity impact within the local system of coordinates (**1**, 2, 3) as related to the direction of reinforcing fibers (axes **1** and 2 located within the armoring area are parallel and perpendicular to the fiber direction, axis 3 is directed transversally), in the case of 3-D deflection analysis are given as follows:

$$\begin{Bmatrix} \sigma_{11} \\ \sigma_{22} \\ \sigma_{33} \\ \\ \sigma_{23} \\ \sigma_{13} \\ \sigma_{12} \end{Bmatrix} = \begin{bmatrix} Q_{11} & Q_{12} & Q_{13} & 0 & 0 & 0 \\ Q_{12} & Q_{22} & Q_{23} & 0 & 0 & 0 \\ Q_{13} & Q_{23} & Q_{33} & 0 & 0 & 0 \\ \\ 0 & 0 & 0 & 2Q_{44} & 0 & 0 \\ 0 & 0 & 0 & 0 & 2Q_{55} & 0 \\ 0 & 0 & 0 & 0 & 0 & 2Q_{66} \end{bmatrix} \times$$

$$\times \begin{Bmatrix} \varepsilon_{11} - \alpha_1 \Delta T - \beta_1 \Delta m \\ \varepsilon_{22} - \alpha_2 \Delta T - \beta_2 \Delta m \\ \varepsilon_{33} - \alpha_3 \Delta T - \beta_3 \Delta m \\ \\ \varepsilon_{23} \\ \varepsilon_{13} \\ \varepsilon_{12} \end{Bmatrix} \qquad (1.1.2)$$

where $Q_{11} = E_{11}(1 - \nu_{23}\nu_{32})/\Delta$, $Q_{22} = E_{22}(1 - \nu_{13}\nu_{31})/\Delta$;
$Q_{33} = E_{33}(1 - \nu_{12}\nu_{21})/\Delta$;
$Q_{44} = G_{23}$, $Q_{55} = G_{13}$, $Q_{66} = G_{12}$;
$Q_{12} = E_{11}(\nu_{21} + \nu_{31}\nu_{23})/\Delta = E_{22}(\nu_{12} + \nu_{13}\nu_{32})/\Delta$;
$Q_{13} = E_{11}(\nu_{31} + \nu_{21}\nu_{32})/\Delta = E_{22}(\nu_{13} + \nu_{12}\nu_{23})/\Delta$;
$Q_{23} = E_{22}(\nu_{32} + \nu_{12}\nu_{31})/\Delta = E_{33}(\nu_{23} + \nu_{13}\nu_{21})/\Delta$;
$\Delta = 1 - \nu_{12}\nu_{21} - \nu_{23}\nu_{32} - \nu_{13}\nu_{31} - 2\nu_{12}\nu_{32}\nu_{13}$;
E_{11}, E_{22}, E_{33} = modules of elasticity along axes 1, 2 and 3, respectively;
G_{12} = shear modulus within the reinforcement plane;
G_{13}, G_{23} = through thickness shear moduli within planes 1 — 3 and 2 — 3, respectively;
ν_{ij} = Poisson's ratio (i, j = 1, 2, 3);
α_1, α_2, α_3 = linear thermal expansion factors along axes 1, 2 and 3, respectively;
β_1, β_2, β_3 = factors considering the ambient humidity impact on the composite ply along axes 1, 2 and 3, respectively;
ΔT = ambient temperature increment;
Δm = ambient humidity increment.

If the composite ply is transversally isotropic, i.e. the properties in directions 2 and 3 are equal, then $\nu_{12} = \nu_{13}$, $G_{12} = G_{13}$, $E_{22} = E_{33}$.

1.1.3 For approximate calculations (a case of plane deflection mode) application of simpler relations is recommended:

$$\begin{Bmatrix} \sigma_{11} \\ \sigma_{22} \\ \sigma_{12} \end{Bmatrix} = \begin{bmatrix} Q_{11} & Q_{12} & 0 \\ Q_{12} & Q_{22} & 0 \\ 0 & 0 & 2Q_{66} \end{bmatrix} \cdot \begin{Bmatrix} \varepsilon_{11} - \alpha_1 \Delta T - \beta_1 \Delta m \\ \varepsilon_{22} - \alpha_2 \Delta T - \beta_2 \Delta m \\ \varepsilon_{12} \end{Bmatrix} \qquad (1.1.3)$$

where $Q_{11} = E_{11}/(1 - \nu_{12}\nu_{21})$, $Q_{22} = E_{22}/(1 - \nu_{12}\nu_{21})$, $Q_{66} = G_{12}$;
$Q_{12} = Q_{21} = \nu_{21}E_{11}/(1 - \nu_{12}\nu_{21}) = \nu_{12}E_{22}/(1 - \nu_{12}\nu_{21})$.

1.1.4 Physical relations of the composite ply arbitrary oriented relative to the riser pipe (within the global system of coordinates x, y, z axis x is directed along the pipe axis, axes y and z are oriented tangentially and radially, respectively) in the case of 3-D deflection analysis are presented as follows:

$$\begin{Bmatrix} \sigma_{xx} \\ \sigma_{yy} \\ \sigma_{zz} \\ \\ \sigma_{yz} \\ \sigma_{xz} \\ \sigma_{xy} \end{Bmatrix} = \begin{bmatrix} \overline{Q}_{11} & \overline{Q}_{12} & \overline{Q}_{13} & 0 & 0 & 2\overline{Q}_{16} \\ \overline{Q}_{12} & \overline{Q}_{22} & \overline{Q}_{23} & 0 & 0 & 2\overline{Q}_{26} \\ \overline{Q}_{13} & \overline{Q}_{23} & \overline{Q}_{33} & 0 & 0 & 2\overline{Q}_{36} \\ \\ 0 & 0 & 0 & 2\overline{Q}_{44} & 2\overline{Q}_{45} & 0 \\ 0 & 0 & 0 & 2\overline{Q}_{45} & 2\overline{Q}_{55} & 0 \\ \overline{Q}_{16} & \overline{Q}_{26} & \overline{Q}_{36} & 0 & 0 & 2\overline{Q}_{66} \end{bmatrix} \times$$

$$\times \begin{Bmatrix} \varepsilon_{11} - \alpha_x \Delta T - \beta_x \Delta m \\ \varepsilon_{22} - \alpha_y \Delta T - \beta_y \Delta m \\ \varepsilon_{33} - \alpha_z \Delta T - \beta_z \Delta m \\ \\ \varepsilon_{23} \\ \varepsilon_{13} \\ \varepsilon_{12} - 1/2 a_{xy} \Delta T - 1/2 \beta_{xy} \Delta m \end{Bmatrix} \qquad (1.1.4\text{-}1)$$

where $\overline{Q}_{11} = Q_{11}m^4 + 2(Q_{12} + 2Q_{66})m^2n^2 + Q_{22}n^4$;
$\overline{Q}_{12} = (Q_{11} + Q_{22} - 4Q_{66})m^2n^2 + Q_{12}(m^4 + n^4)$;
$\overline{Q}_{13} = Q_{13}m^2 + Q_{23}n^2$;
$\overline{Q}_{16} = Q_{11}m^3n - Q_{22}mn^3 - (Q_{12} + 2Q_{66})(m^2 - n^2)mn$;
$\overline{Q}_{22} = Q_{11}n^4 + 2(Q_{12} + 2Q_{66})m^2n^2 + Q_{22}m^4$;
$\overline{Q}_{23} = Q_{13}n^2 + Q_{23}m^2$;
$\overline{Q}_{33} = Q_{33}$;
$\overline{Q}_{26} = Q_{11}mn^3 - Q_{22}m^3n + (Q_{12} + 2Q_{66})(m^2 - n^2)mn$;
$\overline{Q}_{36} = (Q_{13} - Q_{23})mn$;
$\overline{Q}_{44} = Q_{44}m^2 + Q_{55}n^2$;
$\overline{Q}_{45} = (Q_{55} - Q_{44})mn$;

[1] Appendix is prepared pursuant to the regulations of a recognized classification society and is a recommendation only.

$\overline{Q}_{55} = Q_{44}n^2 + Q_{55}m^2;$
$\overline{Q}_{66} = (Q_{11} + Q_{22} - 2Q_{66})m^2n^2 + Q_{66}(m^2 - n^2);$
$\alpha_x = \alpha_1 m^2 + \alpha_2 n^2,\ \beta_x = \beta_1 m^2 + \beta_2 n^2;$
$\alpha_y = \alpha_1 n^2 + \alpha_2 m^2,\ \beta_y = \beta_1 n^2 + \beta_2 m^2;$
$\alpha_z = \alpha_3,\ \beta_z = \beta_3;$
$\alpha_{xy} = (\alpha_1 - \alpha_2)mn,\ \beta_{xy} = (\beta_1 - \beta_2)mn.$

Here $m = \cos\theta$, $n = \sin\theta$, and angle θ is measured in the positive direction. For approximate calculations (the case of plane deflection) application of simpler relations is recommended:

$$\begin{Bmatrix}\sigma_{xx}\\ \sigma_{yy}\\ \sigma_{xy}\end{Bmatrix} = \begin{bmatrix}\overline{Q}_{11} & \overline{Q}_{12} & 2\overline{Q}_{16}\\ \overline{Q}_{12} & \overline{Q}_{22} & 2\overline{Q}_{26}\\ \overline{Q}_{16} & \overline{Q}_{26} & 2Q_{66}\end{bmatrix} \cdot \begin{Bmatrix}\varepsilon_{11} - \alpha_1\Delta T - \beta_x\Delta m\\ \varepsilon_{22} - \alpha_y\Delta T - \beta_y\Delta m\\ \varepsilon_{12} - 1/2\alpha_{xy}\Delta T - 1/2\beta_{xy}\Delta m\end{Bmatrix}. \quad (1.1.4\text{-}2)$$

1.1.5 The composite laminate ultimate limit state is determined by a respective strength criterion:

$$R^2(F_{11}\sigma_{11}^2 + F_{22}\sigma_{22}^2 + F_{33}\sigma_{33}^2 + F_{12}\sigma_{12}^2 + F_{13}\sigma_{13}^2 + F_{23}\sigma_{23}^2) + R^2(2H_{12}\sigma_{11}\sigma_{22} + 2H_{13}\sigma_{11}\sigma_{33} + 2H_{23}\sigma_{22}\sigma_{33}) + R(F_1\sigma_{11} + F_2\sigma_{22} + F_3\sigma_{33}) < 1 \quad (1.1.5\text{-}1)$$

in 2-D stress state:

$$R^2(F_{11}\sigma_{11}^2 + F_{22}\sigma_{22}^2 + F_{12}\sigma_{12}^2 + 2H_{12}\sigma_{11}\sigma_{22}) + R(F_1\sigma_{11} + F_2\sigma_{22}) < 1 \quad (1.1.5\text{-}2)$$

where $R = \gamma_F\gamma_{Sd}\gamma_M\gamma_{Rd}$;

$$F_{11} = \frac{1}{\hat{\sigma}_{11}^{(+)}\cdot\hat{\sigma}_{11}^{(-)}};\ F_{22} = \frac{1}{\hat{\sigma}_{22}^{(+)}\cdot\hat{\sigma}_{22}^{(-)}};\ F_{33} = \frac{1}{\hat{\sigma}_{33}^{(+)}\cdot\hat{\sigma}_{33}^{(-)}};$$

$$F_{12} = \frac{1}{\hat{\sigma}_{12}^2};\ F_{13} = \frac{1}{\hat{\sigma}_{13}^2};\ F_{23} = \frac{1}{\hat{\sigma}_{23}^2};$$

$$F_1 = \frac{1}{\hat{\sigma}_{11}^{(+)}} + \frac{1}{\hat{\sigma}_{11}^{(-)}};\ F_2 = \frac{1}{\hat{\sigma}_{22}^{(+)}} + \frac{1}{\hat{\sigma}_{22}^{(-)}};\ F_3 = \frac{1}{\hat{\sigma}_{33}^{(+)}} + \frac{1}{\hat{\sigma}_{33}^{(-)}};$$

$$H_{12} \cong -\frac{1}{2}\sqrt{F_{11}F_{22}};\ H_{13} \cong -\frac{1}{2}\sqrt{F_{11}F_{33}};\ H_{23} \cong -\frac{1}{2}\sqrt{F_{22}F_{33}}$$

where $\hat{\sigma}_{11}^{(+)}$ — the maximum tensile composite ply strength in the direction of axis 1;
$\hat{\sigma}_{11}^{(-)}$ — the maximum compression composite ply strength in the direction of axis 1;
$\hat{\sigma}_{22}^{(+)} = E_{22}/E_{11}\,\hat{\sigma}_{11}^{(+)}$ — the modified tensile composite ply strength in the direction of axis 2;
$\hat{\sigma}_{22}^{(-)} = E_{22}/E_{11}\,\hat{\sigma}_{11}^{(-)}$ — the modified compression composite ply strength in the direction of axis 2;
$\hat{\sigma}_{33}^{(+)}$ — the maximum tensile composite ply strength in the direction of axis 3;
$\hat{\sigma}_{33}^{(-)}$ — the maximum compressive composite ply strength in the direction of axis 3;
$\hat{\sigma}_{12}$ — the maximum inplane shear strength of a composite ply;
$\hat{\sigma}_{13}$ — the maximum through thickness shear strength of a composite ply within plane 1 — 3;
$\hat{\sigma}_{23}$ — the maximum through thickness shear strength of a composite ply within plane 2 — 3.

1.1.6 When calculating deflections of a riser pipe made of composite the following ratios shall be used to determine longitudinal C_L, bending C_B and torsional C_T stiffness:

$$C_L = 2\pi R\overline{A}_{11}; \quad (1.1.6\text{-}1)$$

$$C_B = \pi R(\overline{A}_{11}R^2 + 2\overline{B}_{11}R + \overline{D}_{11}); \quad (1.1.6\text{-}2)$$

$$C_T = 2\pi R(\overline{A}_{66}R^2 + 2\overline{B}_{66}R + \overline{D}_{66}); \quad (1.1.6\text{-}3)$$

where $\overline{A}_{lm} = \sum_{k=1}^{p}(q_{lm})_k(n_k - n_{k-1}),\ (l,m = 1,6);$
$\overline{B}_{lm} = 1/2\sum_{k=1}^{p}(q_{lm})_k(n_k^2 - n_{k-1}^2),\ (l,m = 1,6);$
$\overline{D}_{lm} = 1/3\sum_{k=1}^{p}(q_{lm})_k(n_k^3 - n_{k-1}^3),\ (l,m = 1,6);$

R = the external radius of a riser pipe;
t_r = the riser pipe wall thickness;
p = the number of pliers consisting of different materials (composite, steel, etc.), which form the riser pipe wall;
n_k = the coordinate system of a riser pipe wall pliers $(-t_r/2 = n_0 < n_1 < ... < n_p = t_r/2)$;

$$q_{11} = \overline{Q}_{11} - \frac{\overline{Q}_{12}^2}{\overline{Q}_{22}},\ q_{16} = \overline{Q}_{16} - \frac{\overline{Q}_{12}\overline{Q}_{26}}{\overline{Q}_{22}},\ q_{66} = \overline{Q}_{66} - \frac{\overline{Q}_{26}^2}{\overline{Q}_{22}}.$$

1.1.7 Failure in composite materials usually involves a sequence of failure mechanisms (matrix cracking, delamination, fiber failure, etc.), each of which leads to local change of material properties.

1.1.8 The development of local failure mechanisms, with corresponding local degradation of material properties, may result in decreased values for the global stiffness parameters. This may effect the overall global behaviour (e.g. displacements, bending and effective tension) of the riser system. Thus, the parameters that serve as boundary conditions for the local and global analysis shall be considered in the composite riser pipe design.

1.1.9 The parameters that serve as boundary conditions for the local and global analysis shall be considered using one of the following methods:

global-local procedures;

global procedure with response surface.

The principal difference between the methods is the level on which ultimate limit states are evaluated. Another obvious difference, which follows from the prior, is the order in which the global and local analysis is conducted.

1.2 Global-local procedure.

1.2.1 In order to evaluate the limit states one first performs global analysis of the entire riser system. The resulting global load effects (e.g. effective tension, bending, torsion, internal or external overpressure) serve as boundary conditions for the forthcoming local analysis (local displacement fields, stresses and strains).

1.2.2 The local load effects resulting from the local analysis are finally applied in the local acceptance criteria (or failure criteria) in order to detect possible failure mechanisms of the riser components. If the local investigations are performed by progressive failure analysis, it is possible to detect a sequence of failure mechanisms that may happen prior to the final failure mechanism.

1.2.3 Local failures of riser pipe components lead to reduced riser stiffness, which may influence the overall behaviour of the riser system. Therefore, it may be necessary to repeat the global analysis (with degraded material properties where relevant) in order to increase reliability of calculations. The resulting global load effects (e.g., effective tension, bending, torsion, internal or external overpressure) serve as boundary conditions for the local analysis (local displacement fields, deformations, stresses, internal and external overpressure) of a riser pipe component.

This iterative local-global procedure shall be performed until a new failure mechanism is observed (acceptable design) or until a crucial failure mechanism is predicted (unacceptable design).

1.3 Global procedure with response surface.

1.3.1 As an alternative to the global-local procedure a procedure may be used that requires extensive local analysis to be conducted prior to the global failure analysis. The local analysis is used to establish response surface that can be used in subsequent global analysis.

1.3.2 Prior to the global analysis of the riser system, global limit states are established by performing local failure analysis (of the pipes as well as the connectors/ joints) for a large number of combinations of global load effects (bending, torsion, effective tension and internal/ external overpressure). The global limit states are represented as surfaces in a space/coordinate system with bending/torsion, effective tension and internal/ external overpressure along the axes. The surfaces are obtained by interpolating a collection of points (load cases), from the local analysis. Such global limit states may be established for each failure mechanism.

1.3.3 In the first step global analysis is performed with initial (non-degraded) stiffness properties. Then a limit state corresponding to a non-crucial failure mechanism gets exceeded in certain global elements. In this case the global analysis needs to be repeated using the reduced stiffness properties of damaged system components. The stiffness properties shall be reduced according to the observed local failure mechanism. This iterative procedure shall be performed until a new failure mechanism is observed (acceptable design) or until a crucial failure mechanism is predicted (unacceptable design).

1.3.4 Example of a global procedure with response surface.

The global failure criterion shall be established for a small section of the riser. Typically such a section could be a riser joint of about 15 m length consisting of a pipe section with two end fittings. A joint could also be modeled by establishing two separate response surfaces: one for the pipe section and one for the joint. For a long continuous riser pipes a global failure criterion would typically only be established for the pipe section.

A pipe section is analyzed for the following loads: pressure P, axial load A, bending moment M and torsion T. The loads applied to the riser pipe section are shown in Fig. 1.3.4-1.

It shall be stressed that torsion can often be neglected for metal risers. However, even small torsional loads may cause damage in a polymeric composite riser, depending on the particular layout and joint geometry.

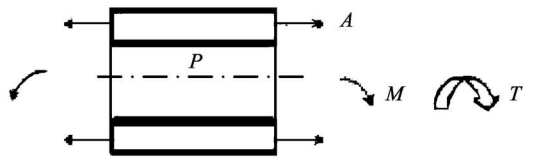

Fig. 1.3.4-1
General loading conditions for a composite riser pipe.

For each combination a stress analysis of the section is carried out and all relevant failure criteria are checked at all places of the section. As a result, a four dimensional failure envelope can be defined for that section of the riser. A typical failure envelope for the 0°/90° composite laminate is shown in Fig. 1.3.4-2.

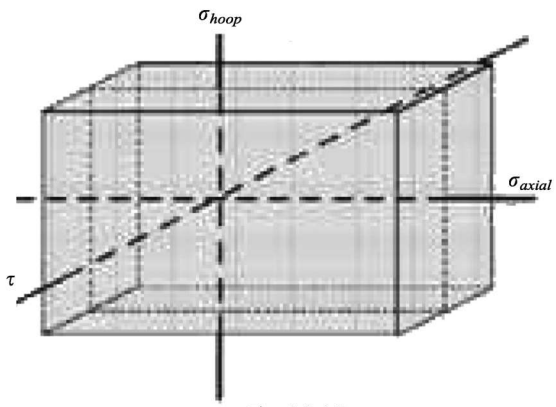

Fig. 1.3.4-2
Simple schematic of a failure envelope of a 0/90 laminate.

If the pipe is put under internal pressure, the fibers in the hoop direction see twice as much stress as the fibers in the axial direction (since we have the same number of fibers running in both directions). The burst pressure will be related to the maximum stress the fibers can take in the hoop direction, provided the laminate is thin and we have the same stress in the hoop fibers through the thickness (a condition that is often not fulfilled for composite risers). The calculation gives point P_1 in the global failure envelope on the pressure axis. This is shown in Fig. 1.3.4-3 for a two dimensional "P — A" failure criterion.

If the riser pipe is exposed to effective axial loads in addition to internal pressure, the stresses in the axial fibers will increase. The strength of the axial fibers has to be large enough to carry the applied axial load plus the end cap load from the pressure. This gives points P_2 and P_3 in the global failure criterion. P_2 describes

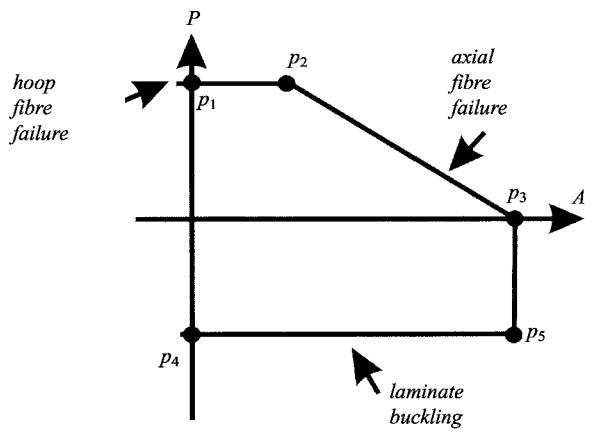

Fig. 1.3.4-3 Global failure envelope for composite riser pipe exposed to internal pressure and axial force

the maximum axial load under maximum pressure. Ignoring Poisson's effects and interactions between the fibers, the failure envelope is given by lines between P_1, P_2 and P_3.

Under external pressure, collapse is defined by a buckling criterion. The collapse pressure is shown as P_4. If we assume that the collapse pressure is not effected by an axial load, P_5 indicates the maximum external pressure and the maximum axial load combination.

Many risers are not exposed to compressive axial loads and the failure envelope is not expanded in the negative direction along the "axial force" semi axis.

If the riser pipe sees torsion, the fibers of the 0°/90° laminate will not be stressed. Torsional load must be carried by the matrix. The torsional load is then proportional to the in-plane shear strength of the matrix (refer to 1.3.4-4).

In reality, the failure envelopes tend to be more complicated, because fiber orientations are more complicated, three dimensional stresses shall be considered, and in particular the composite metal interface may behave totally differently from the simple pipe.

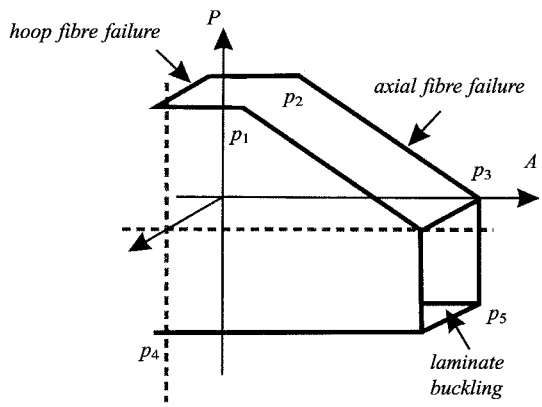

Fig. 1.3.4-4
Global failure envelope for composite riser pipe ex-posed to external pressure, axial force and torsion

The intention of this example was just to show the principle of the development of a global failure envelope.

2 DETERMINATION OF WALL THICKNESS OF A COMPOSITE RISER PIPE

2.1 The selection of a composite riser pipe wall thickness is based on the necessity to ensure strength (stability) and the required safety level of the riser. Calculations shall be made for the most unfavorable combination of loads.

2.2 The riser pipe wall thickness shall be determined based on the following conditions:

local strength of the riser pipe;

sufficient local stability of the riser pipe.

2.3 Strain vector components of any composite riser pipe section within the global Cortesian coordinate system x, y, z $\{\varepsilon_{xx}, \varepsilon_{yy}, \varepsilon_{zz}, \varepsilon_{yz}, \varepsilon_{xz}, \varepsilon_{xy}\}$ shall be determined using the values of local displacement fields, deformations and stresses corresponding to the location of the riser elastic static line under the most unfavorable combination of loads. For each composite ply these strains shall be transformed to strains along the ply main axes 1, 2, 3 $\{\varepsilon_{11}, \varepsilon_{22}, \varepsilon_{33}, \varepsilon_{23}, \varepsilon_{13}, \varepsilon_{12}\}$ under the by the following formulae:

$$\begin{Bmatrix} \varepsilon_{11} \\ \varepsilon_{22} \\ \varepsilon_{33} \\ \\ \varepsilon_{23} \\ \varepsilon_{13} \\ \varepsilon_{12} \end{Bmatrix} = [T] \begin{Bmatrix} \varepsilon_{xx} \\ \varepsilon_{yy} \\ \varepsilon_{zz} \\ \\ \varepsilon_{yz} \\ \varepsilon_{xz} \\ \varepsilon_{xy} \end{Bmatrix} \tag{2.3}$$

where $[T] = \begin{bmatrix} m^2 & n^2 & 0 & 0 & 0 & 2mn \\ n^2 & m^2 & 0 & 0 & 0 & -2mn \\ 0 & 0 & 1 & 0 & 0 & 0 \\ \\ 0 & 0 & 0 & m & -n & 0 \\ 0 & 0 & 0 & n & m & 0 \\ -mn & mn & 0 & 0 & 0 & (m^2-n^2) \end{bmatrix}$

Stresses $\{\sigma_{11}, \sigma_{22}, \sigma_{33}, \sigma_{23}, \sigma_{13}, \sigma_{12}\}$ in each ply shall be calculated based on the recommendations. After that, ultimate limit state shall be calculated by juxtaposing the obtained stress values and strength criterion for each ply.

2.4 The following composite riser pipe safety factors shall be used in calculations:

.1 γ_F — the load effect factor to be taken in accordance with Table 2.4.1

Table 2.4.1

Load effect factors

Type of load	γ_F
External hydrostatic pressure Internal fluid pressure: hydrostatic and dynamic Water levels	1,2
Weight and buoyancy of a riser, coating, fouling, anodes, buoyancy modules, contents and outfit Internal fluid weight Riser tension Applied displacements and loads induced by the active FPU/FSPM/FOP positioning Thermal stresses Interaction with soil	1,1
Waves Internal waves and other effects due to the water density difference Currents Earthquakes Offsets of FPU/FSPM/FOP due to the wind, waves and currents: mean offset due to the steady wave drift forces, wind forces and currents; vibrations; low-frequency oscillations.	1,3

.2 γ_{Sd} is the partial load model factor to account for inaccuracies, idealizations and biases in the engineering model. When both analytical and numerical (e.g., *FE*-methods) methods are used within their assumptions and limitations, a model factor γ_{Sd} = 1,0 shall be used. When these methods are used beyond the accepted assumptions and limitations, as a minimum, a factor γ_{Sd} = 1,1 shall be used. Besides, when numerical methods are used, convergence of the computational procedure shall be confirmed.

.3 γ_M is the resistance factor to account for the material property uncertainties. The numerical values of γ_M are given in Table 2.4.3.

.4 γ_{Rd} is the resistance model factor to account for differences between true and predicted resistance values given by the failure criterion. The numerical values of γ_{Rd} for each failure criterion are given in Table 2.4.4.

Table 2.4.3

Material resistance factors

Extent of operational reliability	COV of the strength, v		
	v < 10 %	10 % < v < 12,5 %	12,5 % < v < 15 %
Brittle failure type			
Heavy duty	1,22	1,33	1,49
For transportation of aggressive media	1,34	1,53	1,83
For seismically hazardous areas	1,47	1,75	2,29
Plastic or ductile failure type			
Heavy duty	1,11	1,16	1,23
For transportation of aggressive media	1,22	1,33	1,49
For seismically hazardous areas	1,34	1,53	1,83

Table 2.4.4

Resistance model factors

Failure criterion	γ_{Rd}
Fiber failure	1,0
Matrix cracking	1,0 — 1,5
Delamination	1,0 — 2,0
Yielding	1,0
Ultimate failure of orthotropic homogenous materials	1,25
Buckling	1,0 — 2,0
Displacements	1,0
Stress rupture	0,1 — 1,0
Fatigue	0,1 — 1,0

3 STRENGTH CALCULATIONS FOR A COMPOSITE RISER UNDER INTERNAL PRESSURE

3.1 Failure (rupture) of a composite riser pipe may occur due to the internal overpressure or a combination of internal overpressure, axial force, bending and torsion. In this case based on the calculation results of the riser elastic static line the location of cross-section is determined in which the most unfavorable combination of loads occurs, for further deflection analysis. The calculation results in the distribution of stresses and deformations in each composite ply and their comparison with the criterion (refer to 1.1.5).

3.2 If at least one composite ply reaches ultimate limit state, the main reason for it (fiber failure or matrix cracking) needs to be determined. Special consideration shall be given to the prevention of reinforcing fiber failure defined here as a composite ply fracture in fiber direction (axis 1 of the local system of coordinates associated with the composite ply). Failure of fibers exposed to force impact is not allowed. Failure (cracking) of matrix and fiber/matrix interface (delamination) may be allowed provided that the riser pipe tightness is maintained. As a rule, matrix cracking is allowed for riser pipes containing metallic or polymeric liner. In the absence of the liner tightness shall be tested experimentally.

3.3 The matrix cracking and fiber/matrix interface delamination may result in degradation of the elastic properties and ultimate limit states of the composite ply under compression or shear that shall be considered in buckling analysis (critical load value).

4 BUCKLING ANALYSIS OF A COMPOSITE RISER PIPE

Two alternative approaches may be in analyzing buckling problems of a composite riser pipe, which are based on the following:

analysis of isolated components of standard type, such as pipe sections, beams, plates and shells;

analysis of an entire structure.

4.1 Buckling analysis of isolated components.

4.1.1 When a member or component of the riser pipe is analyzed separately a global analysis of the structure shall be first applied to establish:

the effective loading applied to the riser pipe member/component by the adjoining structural parts;

the boundary conditions for the structural member, in terms of translational and rotational stiffness components in all relevant directions.

4.1.2 The following load conditions shall be considered when making buckling assessment of a composite riser pipe isolated components:

axial compression;

bending;

torsion;

external overpressure,

as well as the impact of anisotropy and geometric imperfections on the critical load value.

It may be relevant to consider the simultaneous presence of axial tension along with bending, torsion or external pressure, or of internal overpressure along with axial tension/compression, bending or torsion.

4.1.3 Axial compression may cause global beam-column buckling or local buckling of the riser wall, or a combination of the two. In this case the critical values of the mean axial compressive stress for elastic buckling in the global and local modes, $\sigma_{cr\,global}$ and $\sigma_{cr\,local}$ and the buckling resistance, $\widehat{\sigma}_{buckling}$ is determined as follows:

$$\frac{1}{\widehat{\sigma}_{buckling}} = \frac{1}{\widehat{\sigma}_{buck\,global}} + \frac{1}{\widehat{\sigma}_{buck\,local}}; \qquad (4.1.3\text{-}1)$$

$$\widehat{\sigma}_{buck\,global} = k_{A\,global}\,\sigma_{cr\,global} = \frac{R^2}{L^2}\,\frac{k_{A\,global}\,\pi^2 E_{xx}}{2}; \qquad (4.1.3\text{-}2)$$

$$\widehat{\sigma}_{buck\,local} = k_{A\,local}\,\sigma_{cr\,local} = \frac{t_r}{R}\,\frac{k_{A\,local}\,E_{xx}K_1}{[3(1-\nu_{x\theta}\nu_{\theta x})]^{1/2}}, \qquad (4.1.3\text{-}3)$$

where L = effective length of the riser tube for global buckling;
R = radius of the riser tube;
t_r = thickness of the riser tube;
x = axial direction;
θ = circumferential direction;
E_{xx} = effective modulus of elasticity in the riser axis direction;
$\nu_{x\theta}$ = effective Poisson's ratio normal to the fiber plane;
K_1 = anisotropy factor determined as follows:

$$K_1 = \left\{2\left[1 + \nu_{x\theta}\left(\frac{E_{\theta\theta}}{E_{xx}}\right)^{1/2}\right]\left(\frac{E_{\theta\theta}}{E_{xx}}\right)^{1/2}\frac{G_{x\theta}}{E_{xx}}\right\}^{1/2} \qquad (4.1.3\text{-}4)$$

where $E_{\theta\theta}$ = effective modulus of elasticity in the circumferential direction;
$G_{x\theta}$ = effective shear modulus in the fiber plane.

Note. Elastic engineering constants shall be defined only for symmetric laminates.

The knock-down factors to account for geometric imperfections, $k_{A\,global}$ and $k_{A\,local}$ shall be taken as 0,67 and 0,5 respectively.

Global buckling under conditions of displacement-controlled loading may be permitted, provided it does not result in local buckling, unacceptable displacements, or unacceptable cyclic effects.

4.1.4 For bending in the riser tube components, the critical bending moment for elastic buckling, M_{cr}, and the buckling resistance moment, $\widehat{M}_{buckling}$, are determined by the formula:

$$\widehat{M}_{buckling} = k_M M_{cr} = \frac{1{,}3 k_M \pi R t_r^2 E_{xx} K_1}{[3(1-\nu_{x\theta}\nu_{\theta x})]^{1/2}}, \qquad (4.1.4)$$

where R = radius of the riser tube;
t_r = thickness of the riser tube;
x = axial direction;
θ = circumferential direction;
E_{xx} = effective modulus of elasticity in the riser axis direction;
$\nu_{x\theta}$, $\nu_{\theta x}$ = effective Poisson's ratio normal to the fiber plane;
K_1 = anisotropy factor;
k_M = knock-down factor to account for geometric imperfections, which shall be taken as k_M = 0,5.

In design of the riser system a minimum effective tension that gives a margin above the tension that is predicted to cause excessive bending moments shall be established.

4.1.5 For the case of torsional loading, the critical torsional moment for elastic buckling, $M_{T\ cr}$, and the buckling resistance torsional moment, $\widehat{M}_{T\,buckling}$, are determined by the formula:

$$\widehat{M}_{T\,buckling} = k_T M_{T\ cr} = 21{,}7 k_T D_{\theta\theta} \frac{R^{5/4}}{L^{1/2} t_r^{3/4}} \left[\frac{(A_{xx}A_{\theta\theta} - A_{x\theta}^2)t_r^2}{A_{\theta\theta}D_{\theta\theta}}\right]^{3/8} \qquad (4.1.5\text{-}1)$$

where R, L, t_r = radius, length and thickness of the riser tube respectively;
A_{xx}, $A_{\theta\theta}$, $A_{x\theta}$ = laminate elastic constants for in-plane deformations;
D_{xx}, $D_{\theta\theta}$, $D_{x\theta}$ = laminate elastic constants for bending deformation;
k_T = knock-down factor to account for geometric imperfections, which shall be taken.

This formula is valid only when the coupling factor $B_{ij} = 0$ ($i, j = x, \theta$) as in the case of a symmetric laminate lay-up, and when

$$\frac{1}{L^2} \leqslant \left(\frac{D_{\theta\theta}}{D_{xx}}\right)^{5/6} \left[\frac{(A_{xx}A_{\theta\theta} - A_{x\theta}^2)t_r^2}{12 A_{\theta\theta} D_{xx}}\right]^{1/2} \left(\frac{500}{R t_r}\right). \qquad (4.1.5\text{-}2)$$

4.1.6 For the case of external pressure loading the critical pressure for elastic buckling, p_{cr}, and the buckling resistance pressure, $\widehat{p}_{buckling}$, may be estimated from:

$$\widehat{p}_{buckling} = k_p p_{cr} = \frac{3 k_p (D_{\theta\theta} - B_{\theta\theta}^2/A_{\theta\theta})}{R^3}. \qquad (4.1.6\text{-}1)$$

The knock-down factor, k_p, to account for geometric imperfections shall be taken as 0,75. The above formula applies for long tubes. For shorter lengths of tube following formula shall be used:

$$\widehat{p}_{buckling} = k_p p_{cr} = \frac{5{,}5 k_p D_{\theta\theta}}{L R^{3/2} t_r^{1/2}} \left[\frac{(A_{xx}A_{\theta\theta} - A_{x\theta}^2)t_r^2}{A_{\theta\theta}D_{\theta\theta}}\right]^{1/4}, \qquad (4.1.6\text{-}2)$$

that assumes a symmetric lay-up and is valid only when:

$$\left(\frac{D_{\theta\theta}}{D_{xx}}\right)^{3/2} \left[\frac{(A_{xx}A_{\theta\theta} - A_{x\theta}^2)t_r^2}{12 A_{\theta\theta} D_{xx}}\right]^{1/2} \left(\frac{L^2}{R t_r}\right) \geqslant 500. \qquad (4.1.6\text{-}3)$$

p_{er} is the local minimum internal pressure needed to prevent the riser pipe buckling. For installation with a drained pipe $p_{\min}$ equals zero. For installation with a water-filled pipe $p_{\min} = p_e$.

4.1.7 The failure criterion for all considered cases of loading shall be determined by the formula:

$$\gamma_F \gamma_{Sd} F \leqslant \frac{F_{buckling}}{\gamma_{Mbuckle}\gamma_{Rdbuckle}} \qquad (4.1.7\text{-}1)$$

where F = characteristic value of the induced stress or stress resultant (σ, M, T, p);
$F_{buckling}$ = characteristic value of the resistance obtained from the tests (σ, M, T, p);
γ_F = partial load or load effect factor;
γ_{Sd} = partial load or load effect model factor;
$\gamma_{Mbuckle}$ = partial resistance factor;
$\gamma_{Rdbuckle}$ = partial resistance-model factor.

The partial resistance factors $g_{Mbuckle}$ and $\gamma_{Rdbuckle}$ may be taken as 1,0, if the knock-down factors are adopted.

The load effect model factor γ_{Sd} shall take account of the accuracy of representation of geometrical imperfections and boundary conditions.

For cases of combined loadings of the axial force, bending, torsion and external pressure the riser stability shall be considered ensured, by assuming the following inequation satisfied:

$$\frac{F}{\widehat{F}_{buckling}} = \frac{\sigma}{\widehat{\sigma}_{buckling}} + \frac{M}{\widehat{M}_{buckling}} + \frac{M_T}{\widehat{M}_{T\ buckling}} + \frac{p}{\widehat{p}_{buckling}} \leqslant$$

$$\leqslant \frac{1}{\gamma_F \gamma_{Sd} \gamma_{Mbuckle} \gamma_{Rdbuckle}} \qquad (4.1.7\text{-}2)$$

where σ, M, M_T and p = characteristic values of the axial compressive stresses, the bending moment, the torsional moment and the external pressure.

4.2 Buckling analysis of an entire composite riser pipe.

Buckling analysis of an entire riser pipe structure shall be carried out using numerical methods.

4.2.2 Application of numerical methods require convergence assessment of the solution obtained. Therefore, initially critical loads shall be calculated using non-degraded composite elastic properties as initial data. This shall be repeated with alternative, finer meshes, until the lowest "eigenvalues" and corresponding "eigenmodes" shall not be significantly affected by further refinement. The main purposes of this analysis shall be to clarify the relevant buckling mode shapes and to establish the required mesh density for subsequent analysis.

4.2.3 A step-by-step non-linear analysis shall be carried out. Geometrical non-linearity shall be included in the model. The failure criteria shall be checked at each step. If failure such as matrix cracking or delamination is predicted, any analysis for higher loads shall be performed with the composite properties reduced.

4.2.4 The influence of geometric imperfections on critical loads shall be assessed on the basis of production tolerances.

4.2.5 The composite riser pipe containing liner shall be analyzed for buckling due to hoop compression. Herewith the following shall be considered:

buckling due to the internal under pressure, i.e. vacuum, without external pressure;

buckling of the liner due to external pressure as a consequence of compression of the main laminate due to external pressure;

buckling of the liner due to external water pressure. This is only relevant if the pressure of the outside water can reach the outer surface of the inner liner;

explosive decompression causes a pressure to build up suddenly between the liner and the composite riser tube, at the same time as the pressure inside the liner suddenly drops;

4.2.6 Buckling analysis of a composite riser pipe shall not be carried out, since local buckling of composite riser pipes is not allowed.

5 LOCAL STRENGTH CRITERIA FOR COMPOSITE RISER PIPES IN WAY OF CONNECTORS

5.1 For metal end fittings connecting composite riser pipe sections the local strength criteria shall comply with **3.4.1**, Part II "Risers".

5.2 Special attention shall be given to the strength of a joint connecting end fitting with metal inner liner and a composite laminate and metal inner liner (the "metal-composite" interface).

5.3 Calculation of local deflection mode and strength of a joint connecting an end fitting with metal inner liner and the metal-composite interface shall be carried out based on the loads and boundary conditions determined using the values of displacement fields, deformations and stresses corresponding to the location of the riser elastic static line under the most unfavorable combination of loads.

5.4 When carrying out local deflection mode analysis and calculation of strength of a joint connecting an end fitting with metal inner liner and the metal-composite interface, the following shall be considered:

possible discrepancies in linear Factors of thermal expansion of the materials connected;

metal corrosion effect.

5.5 When carrying out local deflection mode analysis and calculation of strength of a joint connecting the end fitting with metal inner liner, the following shall be considered:

axial force;

bending moment;

torsional moment;

internal/external pressure.

LIST OF CIRCULAR LETTERS AMENDING/SUPPLEMENTING NORMATIVE DOCUMENT

Rules for the Classification and Construction of Subsea Pipelines, 2017

ND No. 2-020301-005-E

(Normative document No. and title)

Item No.	Circular Letter No., date of approval	List of amended and introduced paras/chapters/sections
1.	391-06-1216c dated 12.04.2019	Part I: paras 1.1.1, 1.2, Table 1.3.3, paras 1.4.5.5, 1.5.16, Table 4.3.9.1, paras 4.3.8.3.4, 4.5.3.2, 6.1.7, 6.2.2.2, 6.2.2.3, Table 7.4.3.3, paras 8.2.1.12, 8.2.3, 8.2.4, 8.5.3, 8.5.4.4, 8.5.5.6, 8.6.1.3, 8.6.2.1, 8.6.9 Part II: para 1.3.3, 6.10
2.	391-06-1364c dated 24.03.2020	Part I: paras 1.3.9 — 1.3.11, 1.4.5.5

RUSSIAN MARITIME REGISTER OF SHIPPING

CIRCULAR LETTER	**No. 391-06-1216c**	dated 12.04.2019

Re:

amendments to the Rules for the Classification and Construction of Subsea Pipelines, 2017, ND No. 2-020301-005-E

Item(s) of supervision:

subsea pipelines, risers

Entry-into-force date: **from the date of publication** | Valid till: **-** | Validity period extended till: -

Cancels / amends / adds Circular Letter No. **-** dated **-**

Number of pages: 1+11

Appendices:

Appendix 1: information on amendments introduced by the Circular Letter

Appendix 2: text of amendments to Parts I "Subsea Pipelines" and II "Risers"

Director General Konstantin G. Palnikov

Text of CL:

We hereby inform that based on the results of the scientific research, 2017 – 2018, and experience of technical supervision during design, construction and operation of subsea pipelines, the Rules for the Classification and Construction of Subsea Pipelines shall be amended as specified in Appendix 2 to the Circular Letter. The above amendments will be introduced into the Rules at their re-publication.

It is necessary to do the following:

1. Bring the content of the Circular Letter to the notice of RS surveyors and interested persons in the area of RS Branch Offices' activity.
2. Apply provisions of the Circular Letter.

List of the amended and/or introduced paras/chapters/sections

Part I: paras 1.1.1, 1.2, Table 1.3.3, paras 1.4.5.5, 1.5.16, 4.3.8.3.4, Table 4.3.9.1, paras 4.5.3.2, 6.1.7, 6.2.2.2, 6.2.2.3, Table 7.4.3.3, paras 8.2.1.12, 8.2.3, 8.2.4, 8.5.3, 8.5.4.4, 8.5.5.6, 8.6.1.3, 8.6.2.1, 8.6.9

Part II: para 1.3.3, 6.10

Person in charge: Andrey S. Avdonkin 391 + 7 (812) 380-19-54

"Thesis" System No. 19-70283

Appendix 1 to Circular Letter
No. 391-06-1216c dated 12.04.2019

Information on amendments introduced by the Circular Letter
(for inclusion in the Revision History to the RS Publication)

Nos.	Amended paras/chapters/sections	Information on amendments	Number and date of the Circular Letter	Entry-into-force date
1	Part I, para 1.1.1	Type of transported media has been specified. Reference to the cancelled RS normative document has been deleted	391-06-1216c of 12.04.2019	12.04.2019
2	Part I, para 1.2	Definitions "Subsea pipeline", "Pipeline construction", "Transported media", "Pipe-layer" have been specified	391-06-1216c of 12.04.2019	12.04.2019
3	Part I, Table 1.3.3	Type of transported media has been specified	391-06-1216c of 12.04.2019	12.04.2019
4	Part I, para 1.4.5.5	List of conditions when the Classification Certificate becomes invalid has been specified	391-06-1216c of 12.04.2019	12.04.2019
5	Part I, para 1.5.16	Reference to the Rules for Technical Supervision during Construction of Ships and Manufacture of Materials and Products for Ships and name of Certificate as per form 6.8.5 have been specified	391-06-1216c of 12.04.2019	12.04.2019
6	Part I, para 4.3.8.3.4	Requirements for acceptance criteria of ultrasonic testing have been specified	391-06-1216c of 12.04.2019	12.04.2019
7	Part I, Table 4.3.9.1	Requirements for type of transported media have been specified	391-06-1216c of 12.04.2019	12.04.2019
8	Part I, para 4.5.3.2	Chapter has been supplemented with the requirements for mechanical properties of the base metal and metal of pipe welded joints	391-06-1216c of 12.04.2019	12.04.2019
9	Part I, para 6.1.7	Formula (6.1.7) has been specified	391-06-1216c of 12.04.2019	12.04.2019
10	Part I, para 6.2.2.2	Requirements for raw materials for concrete manufacture have been specified	391-06-1216c of 12.04.2019	12.04.2019
11	Part I, para 6.2.2.3	Requirements for concrete aggregates have been specified	391-06-1216c of 12.04.2019	12.04.2019

12	Part I, Table 7.4.3.3	Design parameters for galvanic anodes have been specified	391-06-1216c of 12.04.2019	12.04.2019
13	Part I, para 8.2.1.12	Requirements for subsea pipeline crossings have been specified	391-06-1216c of 12.04.2019	12.04.2019
14	Part I, para 8.2.3	Requirements for subsea pipeline crossings including by electrical cables have been introduced	391-06-1216c of 12.04.2019	12.04.2019
15	Part I, para 8.2.4	Requirements for subsea pipeline crossings with the shoreline have been introduced	391-06-1216c of 12.04.2019	12.04.2019
16	Part I, para 8.5.3	Process flow scheme of pipeline laying has been specified	391-06-1216c of 12.04.2019	12.04.2019
17	Part I, para 8.5.4.4	Requirements for pipeline pulling winches have been introduced	391-06-1216c of 12.04.2019	12.04.2019
18	Part I, para 8.5.5.6	Requirements for pipeline pulling winches have been introduced	391-06-1216c of 12.04.2019	12.04.2019
19	Part I, para 8.6.1.3	Chapter has been supplemented with the requirements for subsea pipeline pressure testing	391-06-1216c of 12.04.2019	12.04.2019
20	Part I, para 8.6.2.1	Data to be contained in operation manual has been specified	391-06-1216c of 12.04.2019	12.04.2019
21	Part I, para 8.6.9	Para heading has been specified	391-06-1216c of 12.04.2019	12.04.2019
22	Part II, para 1.3.3.2	Type of transported media has been specified	391-06-1216c of 12.04.2019	12.04.2019
23	Part II, para 6.10	Data to be contained in operation manual has been specified	391-06-1216c of 12.04.2019	12.04.2019

Appendix 2 to Circular Letter
No. 391-06-1216c dated 12.04.2019

RULES FOR THE CLASSIFICATION AND CONSTRUCTION OF SUBSEA PIPELINES, 2017, ND No. 2-020301-005-E

PART I. SUBSEA PIPELINES

1 GENERAL

1.1 SCOPE OF APPLICATION

1 **Para 1.1.1** is replaced by the following text:

"**1.1.1** Requirements of the present Part of the Rules for the Classification and Construction of Subsea Pipelines (hereinafter referred to as "the SP Rules") cover the pipelines designed, constructed and operated offshore, subsea crossings of sections of shore main pipelines to the isolation valves nearest to the shoreline conveying liquid, gaseous and multi-phase hydrocarbons as well as other media capable of being transported through the pipelines.

In addition to the SP Rules during performance of the technical supervision Russian Maritime Register of Shipping (hereinafter referred to as "the Register") also applies the Guidelines on Technical Supervision during Construction and Operation of Subsea Pipelines (hereinafter referred to as "the SP Guidelines"), the standards and rules of the national technical supervisory bodies.".

1.2 TERMS AND DEFINITIONS

2 Definition "Subsea pipeline" is replaced by the following text:

"Subsea pipeline means the part of the pipeline transporting system, which is located below the water level, including the pipeline itself with protective coatings, technical devices and equipment providing transportation of media under given operational conditions including:

infield pipeline means a pipeline between the offshore facilities including fixed offshore platforms and/or subsea production systems (SPS);

interfield pipeline means a pipeline between the offshore facilities of various fields;

offloading pipeline means a pipeline to transport products from the onshore or offshore facilities to the export terminal/quay;

export pipeline means a pipeline to transport products from the offshore facilities to onshore facilities;

subsea section of main pipeline means a section of the main pipeline laid across the sea water area.".

3 Definition "Pipeline construction" is replaced by the following text:

"Pipeline construction means a set of operations related to manufacture, laying, burial/backfilling (if applicable), connection and testing of a subsea pipeline.".

4 Definition "Transported media" is replaced by the following text:

"Transported media means liquid, gaseous and multi-phase hydrocarbon flows and other media capable of being conveyed through pipelines. Depending on transported medium, subsea pipelines are subdivided as follows:

gas pipeline means a pipeline intended for gas transportation;

oil pipeline means a pipeline intended for degassed oil transportation;

multi-phase pipeline means a pipeline intended for wellstream transportation (liquid and gaseous hydrocarbon phase, water fraction, e.g. aqueous solution of hydrate formation inhibitor);

gas-lift pipeline means a pipeline to transport gas intended for gas-lift operation of oil wells;

water pipeline means a pipeline to transport water intended for injection.".

5 Definition "Pipe-layer (pipe-laying vessel/barge)" is replaced by the following text:

"Pipe-layer means the special purpose vessel/barge intended for laying of subsea pipelines.".

6 **Table 1.3.3**. The header of the table is replaced by the following:

"

Operational reliability level	Type of transported medium	
	Liquids and multi-phase flows	Gas

".

1.4 SCOPE OF SURVEYS

7 **Para 1.4.5.5** is replaced by the following text:

"**1.4.5.5** The Classification Certificate of Subsea Pipeline becomes invalid in the following cases:

upon the expiry of its validity;

if the subsea pipeline and its components are not submitted for periodical survey in terms with regard to the delays provided for periodical surveys in the SP Rules;

after repair conducted without the RS supervision or replacement of the components covered by the SP Rules;

in case the subsea pipeline is not in fit technical condition providing its safety;

operational conditions different from those indicated in the class notation;

there is no Oil Spill Response Plan (emergency response plan) approved by the supervisory bodies and technical means for its implementation (or valid contracts with relevant specialized organizations).".

1.5 TECHNICAL DOCUMENTATION

8 **Para 1.5.16** is replaced by the following text:

"**1.5.16** The calculations necessary for determination of the parameters and values regulated by the SP Rules shall be made in compliance with the provisions of the SP Rules or according to the procedures agreed upon with the Register. The procedures and methods used for calculations shall provide an adequate accuracy of the problem solution. Software used for calculations shall have a Type Approval Certificate for Software (form 6.8.5). The Register may require performance of check calculations with the aid of any programme. The Register does not check the correctness of computing operations in calculations. The basic regulations regarding approval of software and the calculation procedures are specified in 12.1, Part II "Technical Documentation" of the Rules for Technical Supervision during Construction of Ships and Manufacture of Materials and Products for Ships.".

4 MATERIALS

4.3 PROCEDURES OF TESTING PIPES AND STEEL ROLLED PRODUCTS

9 **Para 4.3.8.3.4** is replaced by the following text:

"**4.3.8.3.4** The criteria for acceptance of ultrasonic testing when detecting delaminations in the pipe body and near-edge zones shall comply with Table 4.5.5.3-1 or acceptance level U0 in compliance with ISO 10893-8, unless otherwise specified in the documentation approved by the Register.".

10 **Table 4.3.9.1** is replaced by the following:

"Table 4.3.9.1

Nomenclature of special tests for steel of subsea pipelines

Type of transported media	Operational reliability level			
	Basic **L, G**	Advanced **L1, G1**	For corrosive media conveying **L2, G2**	For seismically active regions and ice- resistant standpipes **L3, G3**
Liquids and multi-phase flows (L)	Not required	CTOD	Corrosion tests, CTOD	DWTT, NDT, CTOD,-T_{kb}
Gases (G)	DWTT	DWTT, NDT, CTOD,-T_{kb}	Corrosion tests, DWTT, NDT, CTOD,-T_{kb}	DWTT, NDT, CTOD, T_{kb}
Notes: 1. Corrosion tests include the tests specified in 4.3.9.5. 2. The DWTT requirements are mandatory only for steel grade PCT36 and above, for pipes with diameter of 500 mm and above.				

".

11 New **para 4.5.3.2** is introduced reading as follows:

"**4.5.3.2** Requirements for mechanical properties of the base metal and metal of welded joints of the pipes that exceed the dimensions specified in Table. 4.5.3.1 may, upon agreement with the Register, comply with the requirements of ISO 3183 or GOST 31444 for steels of similar strength categories.".

6 BALLASTING OF SUBSEA PIPELINES

6.1 GENERAL

12 **Formula (6.1.7)** is replaced by the following formula:

"$Q_b \geq \frac{F_g}{f_{fr}} k_{st} + (F_v + q_u + q_s)k_e - Q_p$".

13 **Para 6.2.2.2** is replaced by the following text:

"**6.2.2.2** Cement of domestic grades not less than 400 according to GOST 10178-85 and GOST 31108-2003, as well as cement of other similar grades complying with the requirements of EN 197, BS 12, ASTM C 150, DIN 1164 or other national and international standards may be used for the concrete coating upon agreement with the Register. In Portland cement, the tricalcium aluminate content ($3CaO{\cdot}Al_2O_3$) shall not exceed 8 %.".

14 **Para 6.2.2.3** is replaced by the following text:

"**6.2.2.3** Concrete aggregates shall comply with the requirements of the national standards or regulations used in manufacture of the continuous concrete coatings.

The aggregates shall not contain harmful constituents in such quantities that could affect the concrete strength, for example, in pipeline bending or cause corrosion of reinforcing materials in case of water permeability of the concrete.

Use of aggregates with alkali-sensitive constituents is not allowed.

The maximum grain size and grading[1] curve of the aggregate shall comply with EN 206, ASTM C 33 or other standards.

Properties of iron ore used as filler to obtain the required concrete density shall be not lower than the requirements of GOST R 52939 or its equivalent; in such case, the sulfur content shall not exceed 3 % by mass.".

7 CORROSION PROTECTION

7.4 ELECTROCHEMICAL PROTECTION

15 **Table 7.4.3.3** is replaced by the following:

"Table 7.4.3.3

Design parameters for galvanic anodes

Anode type	Anode surface temperature[1], in °C	Anode immersed in sea water		Anode buried into seabed soil	
		Potential Ag/AgCl/ sea water, in mV	Electrochemical capacity ε, in A· h/kg	Potential Ag/AgCl/ sea water, in mV	Electrochemical capacity ε, in A· h/kg
Aluminium	< 30	–1 050	2 000	–1 000	1 500
	60	–1 050	1 500	–1 000	800
	80[2]	–1 000	900	–1 000	400
Zinc	< 30	–1 030	780	–980	750
	30 – 50[3]			–980	580

[1] For the anode surface temperature between the set limits, current capacity shall he interpolated.

[2] For aluminium anodes, the anode surface temperature shall not exceed 80 °C, unless satisfactory performance is tested and documented.

[3] For zinc anodes, the anode surface temperature shall not exceed 50 °C, unless satisfactory performance is demonstrated in the tests and documented.

Notes: 1. Electrochemical capacity for this alloy is a function of temperature and the anode current density.
2. For the non-buried pipelines, the anode surface temperature shall be taken as the pipeline external temperature.

".

8 PIPELINE INSTALLATION AND TESTING

8.2 PIPELINE ROUTES AND SEABED SOILS

16 **Para 8.2.1.12** is replaced by the following text:

"**8.2.1.12** The requirements for subsea pipeline crossings including crossing with electrical cables (linear facilities of offshore fields) shall be specified in the design documentation on linear facilities to be installed along the routes that cross previously laid linear facilities. For newly constructed linear facilities, the crossing of their routes shall be avoided whenever possible.

Where crossings along the route of the designed subsea pipeline with previously laid linear facilities are required, the requirements of 8.2.3 shall be complied with.

When selecting the designed pipeline route, it is recommended, whenever appropriate, to take into account the crossings of the route by other potential pipelines/cables to be laid in the future. For example, it is recommended that a designed pipeline buried into the seabed soil shall be further buried at the point of a planned crossing to a depth not less than that specified in 8.2.3.3.4.".

17 Chapter is supplemented with new **paras 8.2.3** and **8.2.4** reading as follows:

"**8.2.3 Crossings of subsea pipelines including by subsea electrical cables.**

8.2.3.1 General.

8.2.3.1.1 Design solutions for crossings of subsea pipelines including by subsea electrical cables, shall eliminate the possibility of any damage to pipelines and electrical cables during construction of crossing installation, disturbance of their operation and maintenance conditions.

8.2.3.1.2 Design solutions for crossing of subsea pipelines and electrical cables shall specify the requirements concerning the following:

minimum separation between the pipeline and existing linear facilities;

parameters and technical conditions of the pipeline/electrical cable and their protective coatings;

parameters and conditions of galvanic anode systems;

data on pipeline/electrical cable burial;

coordinates of crossing and marking of existing linear facilities;

confirmation of actual position and orientation of existing linear facilities, lay-out and profile of crossing;

pipelayer anchoring when laying the crossing pipeline;

installation of supporting structures or gravel bed;

checking if free spans of pipelines are acceptable (if they are occurred in trenching or excavation of pits);

methods to prevent scour and erosion around supports;

methods to control and monitor construction;

tolerance requirements for linear facilities at crossing installation;

parameters and bearing capacity of seabed soils (surface soil or soil stripped in trenching or excavation of pits);

data on burial soil and protective supporting structures;

bathymetry and history of seabed mobility;

allowable parameters of waves and currents;

any other specific structural components of subsea pipeline crossing and technology applied in construction (e.g. winch anchoring for pulling a string, method of subsea trenching, excavation of pits and their profiling, etc.).

8.2.3.1.3 The design and detailed design documentation on crossing installation shall be agreed with the owner of the existing pipelines and cable lines and approved by RS. The owner of the utility to be crossed shall be notified of the time of the activities prior to mobilization of pipelaying and service vessels/barges.

8.2.3.1.4 Crossing between pipelines (clear distance taking into account the coatings applied to them) shall be kept separated by a minimum vertical distance of 0,3 m. The crossing angle shall be at least 60° and as close as possible to 90°.

8.2.3.1.5 Crossing between pipelines and electrical cables with voltage up to 35 kV and communication/monitoring cables shall be kept separated by a minimum vertical distance of 0,5 m (clear distance). The crossing angle shall be close to 90°.

8.2.3.1.6 Physical contact between the designed pipeline and existing cables shall be avoided. If necessary, supports, flexible concrete mats and other means of permanent separation shall be installed to avoid contact and to provide the design position of the crossing installation for the entire service life of the pipeline/electrical cable.

Generally, a new pipeline shall be laid using concrete supports at crossing of existing subsea pipelines and using flexible concrete mats at crossing of cable lines.

8.2.3.1.7 In the area of crossing, the designed pipeline shall be provided with magnetic markers and galvanic anodes, one each on the crossing side.

8.2.3.2 Crossing of pipelines/cables that are not buried into the seabed soil.

8.2.3.2.1 At crossing between the existing pipelines/cable lines that are buried and not buried into the seabed soil, the designed nот-buried pipeline shall be installed over the existing utilities.

Vertical clear distance and crossing angle between new and existing pipelines/cable lines shall be taken at least as specified in 8.2.3.1.4 and 8.2.3.1.5.

8.2.3.2.2 Where the soil layer is of sufficient height and stable over the pipeline/cable line buried into the seabed soil, the pipeline to be laid may be installed without additional protection. In this case, a separation between the piping lines shall be calculated taking into account possible settlement of the designed piping line at the critical combination of external loads.

8.2.3.2.3 Where the soil layer is not sufficient over the pipeline/cable line buried into soil (bunded) and where the designed pipeline crosses the pipeline/cable line laid on seabed, the pipeline shall be laid by elevating its pipes from the bottom of the seabed surface using non- conductive materials (sandbags, rock dumping, concrete slabs, flexible concrete mats, etc.) or specifically designed arched concrete structure.

8.2.3.3 Crossing of pipelines/cables that are buried into seabed soil.

8.2.3.3.1 At crossing of the existing buried pipelines/cable lines, a new pipeline that is buried into the seabed soil shall be installed over the existing utilities.

Vertical distance and crossing angle shall be taken at least as specified in 8.2.3.1.4 and 8.2.3.1.5.

A separation between the pipelines/cable lines shall be calculated taking into account the possible settlement of the designed pipeline into the seabed soil at the critical combination of external loads.

8.2.3.3.2 In special cases, given the design justification, e.g. to maintain the required protective layer of seabed soil (burial depth) in areas with intensive ice gouging (refer to 8.3), the designed pipeline may be laid under the existing pipelines.

8.2.3.3.3 In case of laying new pipelines under existing pipelines, the position of existing pipelines shall not be changed. Temporary supports, ground beds or buoyancy devices shall be used for existing pipelines in order to reduce or prevent their sagging after the ground underneath has been removed.

The stability of the temporary supports shall be checked for sliding and overturning moment.

8.2.3.3.4 At the crossing between new and existing pipelines, the vertical clear distance (taking into account the coatings applied to them and the overall dimensions of the equipment used) shall be determined based on the conditions of performance of construction and installation works and the technology used, but no less than the following:

1,0 m – in case of work performance applying the trench method and using pull heads to tighten a string of the new pipeline;

3,0 m – in case of work performance applying Horizontal Directional Drilling (HDD).

8.2.4 Crossings of subsea pipelines with the shoreline.

8.2.4.1 General.

8.2.4.1.1 When selecting a location of shoreline crossing, the following parameters of the planned section shall be taken into account:

geodetic and geological characteristics;

hydrometeorological parameters;

natural and environmental characteristics;

access to the pipeline during operation;

proximity to other facilities (utilities, residential areas, industrial enterprises, etc.).

8.2.4.1.2 In the landfall area, pipelines shall be buried. When calculating a burial depth and length of the subsea pipeline in the landfall area, seabed mobility such as scour, sandbanks, ice conditions, as well as erosion processes in the onshore area shall be considered. These characteristics are determined based on the results of engineering and geological surveys.

If necessary, additional measures may be taken to protect the pipeline such as applying concrete coating, increasing the thickness of anti-corrosion coatings or pipe wall thickness, increasing the trench depth, use of the pipe-in-pipe structure, etc.

8.2.4.1.3 The following methods of construction can be used for landfall:

open excavation works involving trenching;

open excavation works involving construction of sheet piles on the shoreline and in shallow water (cofferdam);

HDD method where the pipeline is pulled through a pre-drilled well in the coastal area.

8.2.4.1.4 Design landfall solutions shall be approved by the Register during review of subsea pipeline design.

8.2.4.2 Requirements for shoreline crossing methods involving trenching.

8.2.4.2.1 Landfall involving open excavation works with trenching shall be used in areas where the geological conditions of shore approach allow for excavation works to be carried out in shallow water without construction of sheet pile walls, and also where construction of sheet pile walls is impossible.

8.2.4.2.2 In the landfall area, dredging equipment shall be selected taking into account the type of soil based on the condition to provide the required burial depth of the pipes laid in soil on the shoreline and near it, as well as the water depth at the shore approach.

The need to protect the trench against the waves and currents using rock-fill dams shall be taken in accordance with the results of engineering and hydrometeorological survey.

8.2.4.2.3 A length of trenching is determined by a width of coastal strip starting from the seaward where the laying from vessels cannot be performed due to insufficient depth.

In addition to a number pipeline runs to be taken into account, a width of the subsea trench at the bottom shall be determined considering the following parameters:

outside diameter of the pipeline with protective and ballasting coatings and tolerance for deviation of the longitudinal pipeline axis from the design trench axis when laying the pipeline;

allowable deviations across the trench width (on both sides of the axis) in the process of trenching and the margin of bottom sediment accumulation in trench on the side of its upper slope.

8.2.4.3 Requirements for shoreline crossing methods involving cofferdam construction.

8.2.4.3.1 Landfall involving cofferdam construction shall be used in areas where the geological conditions of shore approach do not allow for excavation works to be performed in shallow water without construction of sheet pile walls, and also in areas exposed to heavy bottom sediment accumulation.

8.2.4.3.2 A length and width of a subsea trench involving cofferdam construction is determined according to 8.2.4.2.3.

8.2.4.4 Requirements for shoreline crossing methods using HDD.

8.2.4.4.1 The HDD method shall be used in the following cases:

in sections of shoreline with steep shores, as well as where the pipeline is necessary to be buried into seabed to large depths due to the risk of damage by ice;

shoreline with a large number of utilities to be crossed.

Restraints in performing works using the HDD method are difficult geological conditions (e.g. rocks with high strength characteristics), limited length and diameter of the well.

8.2.4.4.2 When constructing the pipeline by the HDD method, a pilot bore is drilled using bottom-hole tool; to drill out the pilot bore, the boring bit is replaced with a reamer. Drilling may be carried out both from the shore and from the sea (from the temporary backfilled cofferdam).

8.2.4.4.3 The pipeline shall be pulled with the minimum break after reaming and calibration of the drill channel have been completed. Prior to pulling, the assembled pipeline string shall be accepted and the preliminary hydraulic test shall be performed.

When pulling, the pulling force shall not exceed the maximum allowable values specified in the design documentation based on the condition of the pipe strength. Pipeline pulling shall be performed continuously except for cases when connections of new pipeline strings are technologically required.

Where necessary in difficult geological conditions, the pipeline is laid in pipe-in-pipe casings that shall be determined at the design stage.

8.2.4.4.4 When performing drilling operations, drilling mud discharge into marine environment is not allowed.

8.2.4.5 Connection of onshore and offshore sections of pipeline.

8.2.4.5.1 In addition to the process flow schemes specified in 8.5.3, the following schemes may be used for connection of the onshore and offshore pipeline sections:

pipeline string is made on the coastal assembly site and then pulled into the sea through a pre-drilled well using a pulling winch of the pipelayer;

pipeline string is made on the coastal assembly site and then pulled into the sea through a pre-drilled well using the HDD rig.

8.2.4.5.2 After laying the pipeline at the shoreline crossing involving trenching and cofferdam construction, the shore and the shore slope shall be protected against collapse when exposed to wave and ice loads, as well as against discharge of rainfall and melt waters.".

8.5 METHODS OF PIPELINE LAYING ON SEABED

18 **Para 8.5.3.7** (existing) is replaced by the following text:

"**.7** pipeline laying using the HHD method.".

19 New **para 8.5.4.4** is introduced reading as follows:

"**8.5.4.4** The winches used shall be provided with indication and recording devices to measure wire tension and their length. All instrumentation shall be calibrated.".

20 New **para 8.5.5.6** is introduced reading as follows:

"**8.5.5.6** The winches used shall be provided with indication and recording devices to measure wire tension and their length. All instrumentation shall be calibrated.".

8.6 SUBSEA PIPELINE TESTING BY PRESSURE

21 New **para 8.6.1.3** is introduced reading as follows:

"**8.6.1.3** In the case of connecting the subsea pipeline to the branch pipes of fixed offshore platforms (to the risers located inside the supporting block), the strength and tightness tests of the subsea pipeline shall be carried out simultaneously with the testing of the above risers making provision for cleaning, calibration and filling the risers and subsea pipelines with test medium using fixed or temporary subsea pig launchers and traps.

For preliminary testing of the linear part of the subsea pipelines (without spool pieces and risers inside offshore platforms), temporary subsea pig launchers and traps.".

22 **Para 8.6.2.1** is replaced by the following text:

"**.1** operation manual including the following:
pipeline filling with test medium;
method and rate of pressurization;
list of equipment/part of equipment to be isolated during a holding period;
method and rate of pressure relief;
removal of test medium;
drying of pipeline bore, if necessary;
emergency and safety procedures and precautions;".

23 Heading of **para 8.6.9** is replaced by the following text:

"**8.6.9** Removal of test medium and drying.".

PART II. RISERS

1 GENERAL

1.3 CLASSIFICATION

24 **Para 1.3.3.2** is replaced by the following text:

"**1.3.3.2** Distinguishing marks corresponding to the type of formation fluid produced/transported:
G – gas;
L – liquid or multi-phase transported medium, including water.".

6 RISER CONSTRUCTION, INSTALLATION AND TESTING

25 **Para 6.10** is replaced by the following text:

"**6.10** pressure tests are conducted in accordance with the program approved by the Register. The program shall include:
method and rate of pressurization;
description and arrangement diagram of measuring devices;
method and rate of pressure relief;
method of test medium removal and drying;
emergency and safety procedures and precautions.".

RUSSIAN MARITIME REGISTER OF SHIPPING

CIRCULAR LETTER	**No. 391-06-1364c**	dated 24.03.2020

Re:

amendments to the Rules for the Classification and Construction of Subsea Pipelines, 2017, ND No. 2-020301-005-E

Item(s) of supervision:

subsea pipelines in operation

Entry-into-force date: **from the date of publication** ~~Valid till:~~ ~~Validity period extended till:~~

~~Cancels / amends / adds Circular Letter No.~~ ~~dated~~

Number of pages: 1+3

Appendices:

Appendix 1: information on amendments introduced by the Circular Letter

Appendix 2: text of amendments to Part I "Subsea Pipelines"

Director General Konstantin G. Palnikov

Text of CL:

We hereby inform that based on the experience of the technical supervision during operation of subsea pipelines classed with the Register, the Rules for the Classification and Construction of Subsea Pipelines shall be amended as specified in the Appendices to the Circular Letter. The above amendments will be introduced into the Rules at their re-publication.

It is necessary to do the following:

1. Bring the content of the Circular Letter to the notice of the RS surveyors, interested organizations and persons in the area of the RS Branch Offices' activity.
2. Apply the provisions of the Circular Letter when performing technical supervision of subsea pipelines in operation.

List of the amended and/or introduced paras/chapters/sections:

Part I: paras 1.3.9 — 1.3.11, 1.4.5.5

Person in charge: Andrey S. Avdonkin 391 +7 812 3801954

"Thesis" System No. 20-65560

Information on amendments introduced by the Circular Letter
(for inclusion in the Revision History to the RS Publication)

Nos.	Amended paras/chapters/sections	Information on amendments	Number and date of the Circular Letter	Entry-into-force date
1	Part I, paras 1.3.9 — 1.3.11	The requirements for subsea pipeline class suspension, reinstatement and withdrawal procedures have been specified	391-06-1364c of 24.03.2020	24.03.2020
2	Part I, para 1.4.5.5	The para has been deleted	391-06-1364c of 24.03.2020	24.03.2020

Appendix 2 to Circular Letter
No. 391-06-1364c dated 24.03.2020

RULES FOR THE CLASSIFICATION AND CONSTRUCTION OF SUBSEA PIPELINES, 2017,

ND No. 2-020301-005-E

PART I. SUBSEA PIPELINES

1 GENERAL

1 **Paras 1.3.9 — 1.3.11** are replaced by the following text:

"**1.3.9** In case the subsea pipeline is not submitted to a mandatory survey within the prescribed time period, or structural alterations not agreed with the RS have been made thereon, or the pipeline has been repaired without the RS supervision, the Classification Certificate of Subsea Pipeline (refer to 1.4.5) becomes invalid, which results in suspension of class.

1.3.9.1 The Classification Certificate shall become invalid, and classification of the subsea pipeline shall be automatically suspended in the event where:

.1 the special survey of the pipeline has not been completed by the prescribed date;

.2 the annual/intermediate survey of the pipeline has not been completed within three (3) months of the due date of the annual survey;

.3 conditions of class (classification requirements) imposed by RS are not met within the specified terms.

1.3.9.2 Irrespective of reason of suspension, the subsea pipeline class may not be suspended for more than twelve (12) months.

1.3.9.3 The pipeline class may not be suspended in case of the documented force majeure. The Register shall decide on taking into account force majeure circumstances by analyzing the evidence submitted by the owner/pipeline operator.

1.3.9.4 The class shall be reinstated during RS surveys taking into account the following:

.1 if the subsea pipeline class is suspended because of undue term of submission for special survey (refer to 1.3.9.1.1), the class may be reinstated in case of satisfactory results of special survey where failure to submit was the reason of class suspension;

.2 if the subsea pipeline class is suspended because of the undue term of submission for periodical survey (refer to 1.3.9.1.2), the class may be reinstated in case of satisfactory results of the respective survey where failure to submit was the reason of class suspension;

.3 if the subsea pipeline class is suspended because of the undue terms of conditions of class (refer to 1.3.9.1.3), the class may be reinstated in case of satisfactory results of checking that the requirement is met;

.4 in all cases if at the moment of reviewing the issue of class reinstatement the term of carrying out any other survey (which has not been the reason of class suspension) is overdue then carrying out such survey shall also be a condition for the RS class reinstatement.

1.3.9.5 If during class suspension the owner or pipeline operator has made any structural alterations in components of the pipeline, including shore approaches, spool pieces and crossings with other linear facilities or other works not agreed with the Register; repair of the pipeline or its components without technical documentation approval or technical supervision of RS is made, then aforesaid shall be considered while specifying the class reinstatement conditions.

All detected changes unauthorized by RS shall be technically justified with submission of technical documentation, certificates or other records subject to further consideration by RS until the pipeline class is reinstated.

1.3.10 Withdrawal of class upon expiry of the period specified in 1.3.9.2, provided that no class reinstatement procedure was initiated prior to its expiry, means termination of the RS technical supervision of the subsea pipeline in operation, and the class shall be reinstated upon

request of the owner or pipeline operator in compliance with reinstatement procedure (refer to 1.3.9.4).

1.3.11 The Register may withdraw the class, in addition to the mentioned in 1.3.10, or refuse to perform technical supervision in cases when the pipeline owner or an operating organization regularly break the SP Rules, as well as in cases when the Party, which has made a survey agreement with the Register, violates it, including as follows:

in case the subsea pipeline is not in fit technical condition providing its safety;

when the subsea pipeline is used for the purpose and under operational conditions different from those indicated in the class notation;

there is no spill/transported media emission response plan approved as required, personnel and equipment for the above works (or valid contracts with relevant licensed contractors).".

2 **Para 1.4.5.5** is deleted.

Российский морской регистр судоходства

Правила классификации и постройки морских подводных трубопроводов

Russian Maritime Register of Shipping

Rules for the Classification and Construction of Subsea Pipelines

The edition is prepared
by Russian Maritime Register of Shipping
8, Dvortsovaya Naberezhnaya,
191186, St. Petersburg,
Russian Federation
www.rs-class.org/en/